Rev. 12/2014

STEPP MFG™

ASPHALT MAINTENANCE EQUIPMENT

SMT TRAILER EMULSIONS TANK

OPERATIONS/MAINTENANCE/PARTS MANUAL

LP or Diesel Burner Systems

12325 River Road North Branch MN 55056 ~ Phone: 651-674-4491 ~ Fax: 651-674-4221
www.steppmfg.com

Warranty

Stepp Manufacturing Company Inc. hereby warrants to the original purchaser that products manufactured by Stepp Mfg. will be free from defects in material and workmanship for a period of one (1) year from the date of purchase.

Stepp Mfg., at its discretion, will provide for the repair or replacement of any part found upon examination by Stepp Mfg. to be defective, except as noted below. Such repair or replacement will be free of charge to the original purchaser for a period of one (1) year from the date of purchase, except as noted below.

No warranty is extended to cover:

•Product pump wear or damage caused by foreign objects.
•Routine maintenance, cleaning, and adjustments.
•Parts/components that have been altered, misused, or improperly adjusted or maintained.
•Transportation to and from the place of warranty repair.
•Removal of material from equipment.

The following items are covered solely by their manufactures warranty:

•Engines
•Hydraulic components
•Burners
•Pumps
•Tires
•Other component parts

The following items are covered by a pro-rata warranty:

•Hoses that carry heated materials.
•Heating elements for hoses and wands.

Disclaimer of further warranty:

Stepp Mfg. makes no warranty, expressed or implied, other than this warranty. The implied warranties of merchantability and fitness for particular purpose are hereby disclaimed. Repair or replacement of products or parts proving to be defective in material or workmanship shall be the exclusive remedy for breach of this warranty.
Stepp Mfg shall not be liable for incidental or consequential damages including but not limited to: damages for inconvenience, rental or purchase of replacement equipment, for loss of profits, loss of material, or other loss resulting from breach of this warranty.
Stepp Mfg reserves the right to incorporate any changes in design into its products without obligation to make such changes on products previously manufactured.
Please see Warranty section for more details.

Stepp Manufacturing Co., Inc.
12325 River Road
North Branch, MN 55056
P: 651-674-4491 F: 651-674-4221
www.steppmfg.com

INTRODUCTION

SMT Mini Tanker

Thank you for selecting *Stepp* highway maintenance equipment. We are confident you will be satisfied with the *Stepp SMT Mini Tanker. Stepp Manufacturing* is backed by over 70 years of experience in the design and manufacture of highway maintenance equipment. This experience along with our innovative design and unique features make the *Stepp SMT* the most efficient *Mini Tanker* available. Continued research and development, along with input from you, the user, help make this possible.

To assure safe operation of this equipment, the operator must read and understand all operating procedures and safety notices contained in this manual. In addition, the operator *must* receive proper instruction on how to safely operate the *Stepp SMT.* Contact the manufacture if any questions arise or if you desire training for additional staff members.

Operating instructions, adjustments and periodic maintenance procedures are given so you, the operator, can keep your unit working like new and expect many years of dependable service from it. Remember, any machine, regardless of design or type, will perform only in relation to the way it is operated and the maintenance it receives.

Read this manual carefully and observe all Warnings and Cautions. If you have any recommendations or comments regarding this manual, please send them attention to: Engineering Dept., Stepp Manufacturing Co. Inc., 12325 River Road, North Branch MN. 55056-6225 or call 651-674-4491.

When ordering parts or making any inquiry about the *Stepp SMT* be sure to include the model number and serial number found on the data plate attached to the frame.

TABLE OF CONTENTS

Introduction	3
Contents	5
Operations	7
Maintenance	17
Troubleshooting	21
Parts	27
NHTSA Reporting Safety Defects	38
Warranty Guide	39
Watlow Programming	45
Schematics	55
Hydraulic Oil MSDS	57
Engine Inserts	69

IMPORTANT NOTICE!
This manual contains cautions and warnings that alert you to potential safety issues.

WARNING is used to inform you of conditions or operations that could cause serious injury or death.

CAUTION is used to inform you of conditions or operations that could cause damage to the equipment

NOTE is used to provide you with additional information that may be helpful or useful for a particular situation.

This manual explains the basic operations, maintenance and use of the Stepp SMT Mini Tanker. The main objective of this equipment is to heat, transport, store, and apply various asphalts and emulsions for crack filling, seal coating, and priming of road surfaces. An optional engine driven pump may be installed to deliver heated product to the road surface through a wand or spray bar.

Before Starting or Operating this Machine

Understand and observe all the following Warnings, Cautions, and Notes.

WARNINGS

- This equipment contains mechanical and heating components that may cause serious injury or death if not handled or maintained properly. All personnel must be properly trained in the operation and maintenance of this equipment.
- Before refueling, shut off the burners and allow all flames in the burner and pilot light to extinguish. Shut off the engine.
- Check fuel lines, fuel line connections, and all other components for leaks. If any leaks are found, they must be repaired before using the unit.
- Know the temperature required for the material being used, and do not exceed this temperature. Avoid over heating, as this may cause equipment damage, personal injury, and/or death.
- Never load a tank with heated oil when moisture is present in the tank. Depending on the temperature of the hot oil, the moisture may instantly boil causing hot oil to foam up and out of the tank causing severe burns.
- Do not operate the tack tank burner when the amount of material in the tank is less than 4" above the flues. Allow 10 minutes cool-down time after the burner has been shut off before exposing the flues. Exposed flues will over-heat and cause an explosion and/or fire.
- The tack tank cover must be unlatched when operating the tack tank burner. This is to provide for emergency venting, in the event of a flash, to prevent the tank from exploding.

CAUTIONS

- Know the materials being used and know the proper handling, heating, application, clean-up, and storage procedures. Not all materials are compatible with each other. Many materials have a very limited shelf life. Most materials require special handling procedures to prevent personal injury and/or equipment damage. Contact your material supplier and/or manufacturer for proper handling instructions. Equipment malfunction or damage due to improper handling or use of the materials is not covered by warranty.
- Do not exceed the maximum heating temperature or storage time as recommended by the material manufacturer. This may cause emulsion type materials to separate and become difficult or impossible to remove from the machine. Consult with the material manufacturer for recommendations.
- Over-agitation or circulation may cause emulsion type materials to separate and become difficult or impossible to remove from the machine. Consult with the material manufacturer for recommendations.
- Do not mix *Anionic* and *Cationic* materials together, as the materials attach to each other and will become difficult or impossible to remove from the machine. If you are not sure consult your material supplier.

NOTES

- Become familiar with the Material Safety Data Sheet (MSDS) for the material being used in the machine and take appropriate safety precautions. Wear the proper clothing and protective gear as recommended by the MSDS and your safety director.
- DO NOT use the equipment unless it is in good condition.
- In case of skin contact with hot materials, dip into **cool**, **clean water immediately**. Do not wipe the product, as this will spread the burn.
- Consult the MSDS and contact your safety director for proper extinguishing of petroleum based fires.
- Carry a fire extinguisher(s) as recommended by your safety director.
- Notify your supervisor or the manufacturer if any questions arise concerning the operation of this equipment.

OPERATIONS

WARNING: *Prior to transporting, the driver of the tow vehicle must assure the safety of the operation. The driver must also know, and assure, the product temperature is within limits.*

Trailer Hook-up

1. Connect trailer to towing vehicle.
   a. Check that hitch is engaged properly.
   b. Attach safety chains to towing vehicle.
   c. Connect battery charging circuit to tow vehicle if required.
   d. Connect electrical plug to towing vehicle.
   e. Connect breakaway cable to towing vehicle.
   f. Check operation of lights and brakes.
2. Secure trailer for transport.
   a. Shut OFF the engine and burners.
   b. Shut OFF all fuel valves.
   c. Be sure the product temperature is not above the recommended operating temperature.
   d. Securely latch the tank cover.

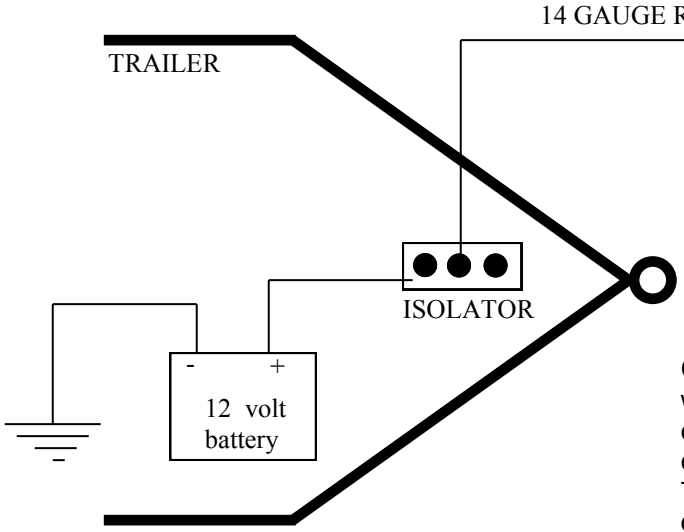

Connection to the tow vehicles battery is required when the Stepp SMT is equipped with spark ignition or electronic thermostats and does not have its own charging system. (ie: onboard engine or generator) The isolator will protect the battery on the trailer from discharging through the tow vehicles electrical system.

1. **Loading Procedures:**
    a. Check that the proper material is being used.
    b. The tank must be thoroughly cleaned if the material being loaded is not compatible with that already in the tank. Check with your material supplier for compatibility.
    c. Tank is loaded through top manhole cover.

WARNING: *Never load a tank with heated oil when moisture is present in the tank. Use caution when loading to avoid splashing hot material on yourself or others.*

This system uses electrical sparks to ignite the pilot lights that, in turn, ignite the burners. If the pilot light goes out, the system will attempt a re-ignition. If the re-ignition is not successful, the gas supply will automatically be shut off and the system must be vented before resetting the system. The system is reset by switching the 12 volt power supply OFF then ON again. By use of a thermostat, the system automatically controls the burners to maintain the desired product temperature.

WARNING: *BEFORE IGINITING BURNER: Know the materials being used. DO NOT exceed flash point or operating range temperatures.*

Igniting Burner

1. Turn OFF burner and pilot valves.
2. Attach liquid LP bottle to system and set regulator between 10 and 20 PSI, depending on intensity of flame desired.
3. Open pilot light valve.
4. Turn on main power switch and a clicking sound can be heard as the ignition system starts to work.
5. When the pilot light ignites, proceed to next step. If ignition has failed, reset power switch. **NOTE:** *The ignition system is designed to sense flame at the pilot light to act as flameout protection. If flame is not present within approximately six seconds, the ignition igniter will drop out and require resetting with the power switch.*

WARNING: *The burner chamber will require venting to eliminate the possibility of gas build up after each ignition reset.*

6. Open burner valve then set thermostat to the desired temperature and the burner will ignite.
7. Operate engine or other charging circuit as necessary to provide power to the thermostat and spark ignition system.

To Shut Off Burners

1. Turn off power switch on the control box.

CAUTION: *When storing the equipment, turn off fuel supply tank valve and allow the fuel system to burn off. This will prevent temperature changes from building excess pressure in the system and possibly damaging components. Then turn OFF the power switch.*

When equipped with a Baso Safety Valve, this system will shut off the gas supply to the burners if the flame should go out for any reason. This system is not equipped with automatic temperature controls. It is the operators responsibility to shut off the burners when the product reaches the recommended temperature. Allow for temperature "creep" when the burners are shut off.

Igniting Burner

1. Verify that the main burner valve and lighting wand valve are OFF.
2. Attach Liquid LP bottle to system and set regulator between 10 to 20 PSI, depending on intensity of flame desired.
3. Open pilot light control valve between four to six turns.
4. Open lighting wand valve ¼ to ½ turn and light immediately to prevent gas build-up and fire hazard.
5. Insert lighting wand near outlet of pilot light.
6. Push the button on the safety control valve (baso valve).
7. Once the pilot light has ignited, hold the button down 30-45 seconds, or until it stays energized by itself.
8. Once the pilot light is lit and the Baso Valve is staying in the operating position, close valve on lighting wand and store.
9. Open the main burner valve slowly until you acquire the desired flame.

To Shut Off Burners

1. Turn off the burner control valve and allow the burner to self-extinguish.
2. Close pilot light valve.

CAUTION: *When storing the equipment, turn off fuel supply tank valve and allow the fuel system to burn off through the lighting wand. This will prevent temperature changes from building up excess pressure in the system and possibly causing damage to the equipment, or personell injury and/or death.*

This system incorporates a 12 volt burner and blower assembly and burns #2 diesel fuel. A 12 volt battery and charging circuit supplies power to the burner, blower motor, and thermostat. The charging circuit may consist of an engine driven alternator mounted on the unit, or a hook-up to the tow vehicle's charging system. The thermostat will automatically control the burners to maintain the desired temperature. The temperature of the material is shown on LCD digital displays.

Igniting Burner

1. Check fuel tank for proper fuel type and quantity.
2. Set thermostat to the product manufacturers recommended level.
3. Turn ON burner power switch and the burner will ignite.
4. Operate battery charging device.

To Shut Off Burner

1. Set thermostat to the lowest setting.
2. Turn OFF burner power switch.

CAUTION: *The burner requires a minimum of 12 volts for proper operation. Poor combustion with excessive smoke and lack of heat or burner malfunction will result with lower voltage. Assure the battery is fully charged and the charging circuit is operating properly for maximum performance.*

Pumping System w/ Spray Wand

An optional pump may be installed to pump material through a spray wand. The pump may be driven by a gas or diesel engine or by an electrical or hydraulic system. The plumbing must be purged of material when finished to prevent plumbing freeze-up. This is done by reversing the pump to suck the material out of the wand. An optional flush tank may also be installed to further flush the system of any remaining material. **NOTE:** *All valves should be OFF unless directed to be open.*

1. Circulate. In this operation, the contents of the tank are pumped through the recirculation system and directed back to the tank to aid heating and mixing.

a. Set Recirculate/Spray valve (2) to "Recirculate" position.

b. Open tank valve (1).

c. Engage pump in “Forward” direction.

2. Spray. In this operation, the contents of the tank are pumped to the wand for application to the road surface.

a. Set Recirculate/Spray valve (2) to "Spray" position.

b. Open tank valve (1).

b. Engage pump in “Forward” direction.

c. Open valve on spray wand.

3. System Purge. (suck back) In this operation, the pump is “Reversed” to purge the product from the system.

a. Disengage pump.

b. Set Recirculate/Spray valve (2) to "Spray" position.

c. Open tank valve (1).

d. Open valve on wand, then engage pump in “Reverse” for two minutes.

e. Close tank valve (1) and disengage pump.

Agitator

Agitator operation is control by a hydraulic control valve. Move the lever from the center position to engage the agitator. The agitator may be operated in either forward or reverse direction. Adjust the variable flow divider to obtain the desired agitator RPM. (20 RPM recommended) Depending on the type of product used, the contents of the tank may need to be heated before agitator operation.

Electric Heated Hose & Wand

This system incorporates heating elements located inside the hose and wand to heat the material and prevent a plugged system. Power for the heating elements is supplied by a 24 volt alternator mounted on the engine.

With this system, no suck-back or flushing of the hose & wand is needed. Activate the electric wand heat control switch to melt the material in the hose & wand.

The Electric Wand heat control should be turned on 30 to 40 minutes before trying to pump material through the hose and wand. This will allow time for the material to re-liquefy in the hose.

CAUTION: *DO NOT activate the electric wand heat unless the hose and wand have product in them. Absence of product will cause the element to overheat and destroy the hose possibly causing serious injury. Do not allow flushing solvent in the hose. The presence of flush solvent in a heated hose will create a fire hazard. DO NOT activate electric heating elements in an empty hose. DO NOT suck-back the material out of the hose & wand. DO NOT flush the hose & wand.*

Shutdown Procedures

The plumbing system must be sucked-back and flushed of material when operations are complete or the system will plug and cause difficulty the next time the equipment is used. See previous pages for material suck-back instructions and operational charts to assist in valve operational placement. Be sure to select the appropriate chart to fit your equipment.

To "Flush" the System:

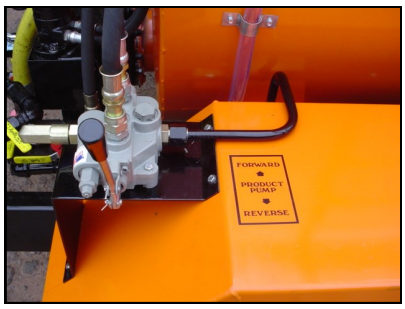

1. Tank valve must be closed for flushing and suck-back operations.
2. Set flush/product valve to "Flush" position.
3. Move the product pump hydraulic control to the "Pump" position.
4. Hold flush switch in the "up" position to flush the system.
5. After 1 minute (minimum) release the flush switch then stop the product pump.

Suck-Back of Flush Solvent:

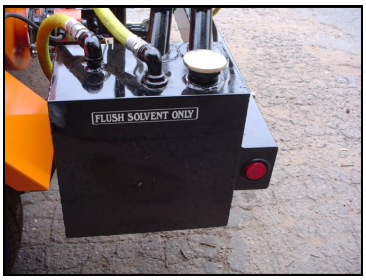

1. Close the tank valve and set flush/product valve to "Flush" position.
2. Move the product pump hydraulic control to the "reverse" position.
3. Open manual air valve located near manifold valve.
4. After 1 minute return the product pump hydraulic control the center (neutral) position.
5. Close manual air valve.

NOTE: *The flush solvent circulates through the system back to the flush tank for reuse. After a period of time the solvent in the flush tank will accumulate excessive sludge and become ineffective. The flush tank will then need to be cleaned and replenished with fresh solvent. A removable cover is located on the rear of the flush tank to allow access for cleaning the sludge from the tank.*

Freezing Weather Operations & Storage:

Emulsion materials must not be allowed to freeze. When operating in cold weather keep the material heated and circulating to prevent freezing. A non-freezing flush solvent should be used.

NOTE: *When storing the equipment be certain:*

1. *All material has been drained from the tank, plumbing, and spray bar.*
2. *All the plumbing components have been thoroughly flushed with a non-freezing flush solvent.*

PUMPING OPERATIONS

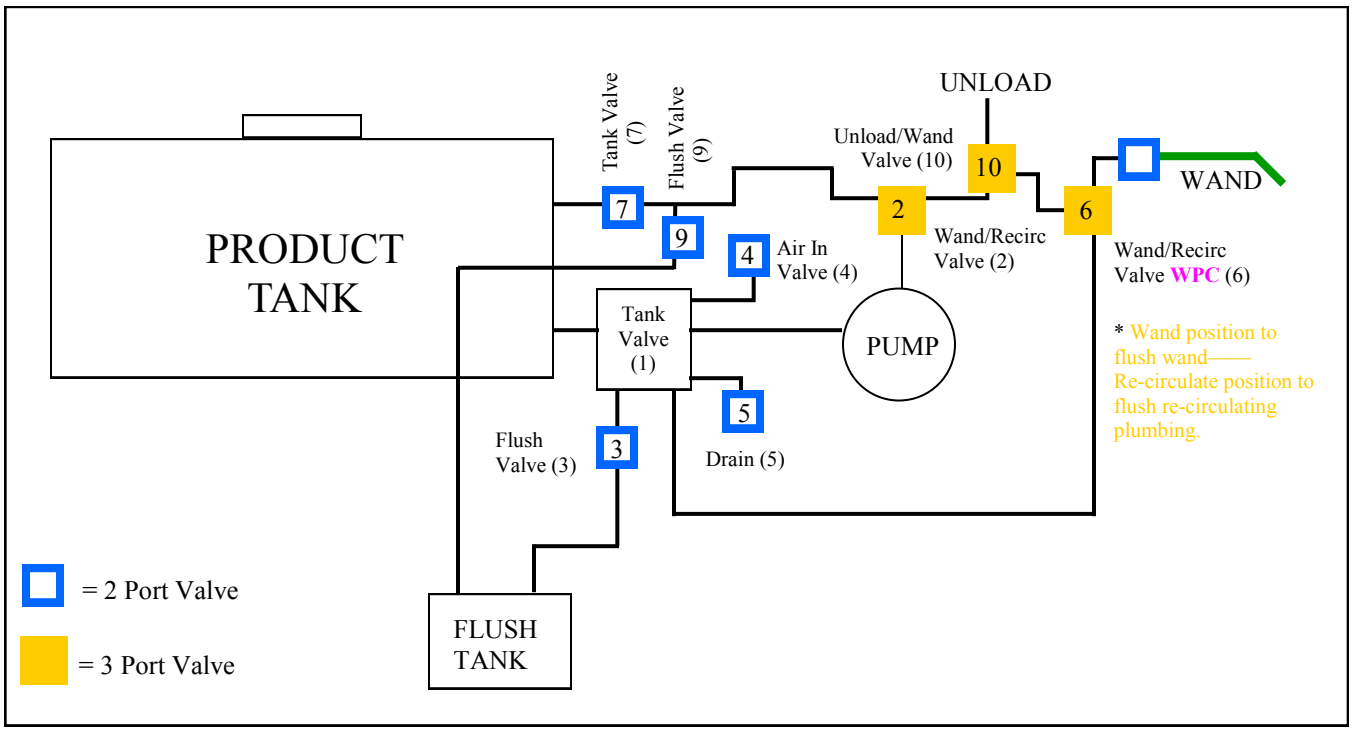

OPERATION	V-1	V-2	V-3	V-4	V-5	V-6 WPC	V-7	V-9	V-10	PUMP
Circulate	ON	Recirc	Off	Off	Off	Wand	On	Off	N/A	Forward
Wand	On	Wand	Off	Off	Off	WPC	Off	Off	Wand	Forward
Air Purge Wand	Off	Wand	Off	On	Off	Wand	Off	Off	Wand	Forward
Flush Wand*	Off	Wand	On	Off	Off	Wand	Off	Off	Wand	Forward
Pump Unload	On	Wand	Off	Off	Off	Recirc	Off	Off	Unload	Forward
Air Purge Plmb	Off	Recirc	Off	On	Off	Recirc	On	Off	Wand	Forward
Flush Plumbing	Off	Recirc	On	Off	Off	Recirc	Off	On	Wand	Forward

CAUTION: *Do not allow flushing solvent to enter product tank. Do not operate heaters unless heating elements are completely covered with a minimum of 6 inches of product. Note: WPC=Wand pressure control valve. Position WPC valve handle between circulation and spray to control wand pressure.*

PUMPING SYSTEM

FLUSH VALVE (9)

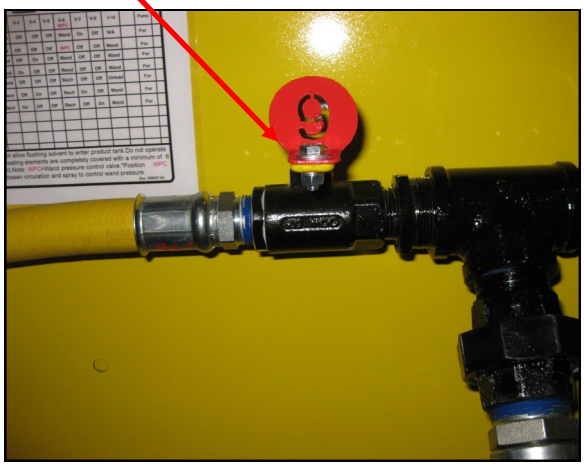

UPPER TANK VALVE (7)

FLUSH VALVE (3)

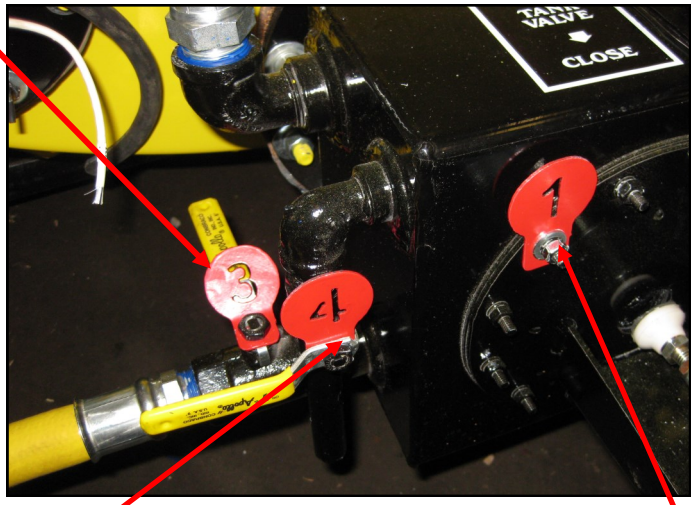

AIR IN VALVE (4)

TANK VALVE (1)

DRAIN (5)

WAND/RECIRC VALVE (2)

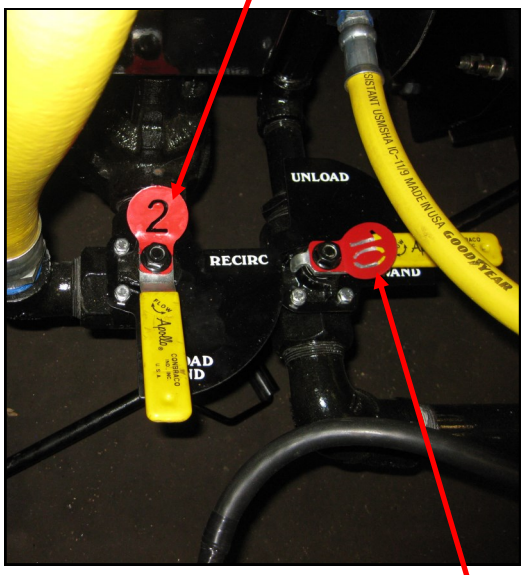

UNLOAD (10)

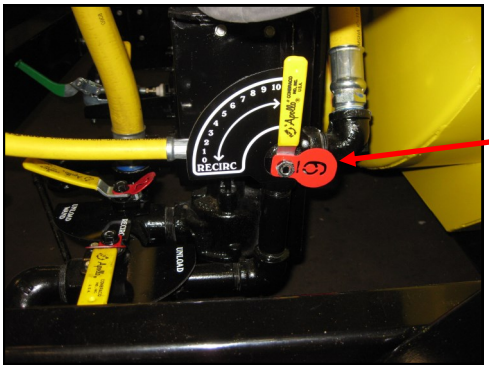

WAND/RECIRC
WPC
VALVE (6)

MAINTENANCE

SMT MINI TANKER MAINTENANCE SCHEDULE

ITEM	OPERATION TO PERFORM	DAILY	EVERY WEEK	EVERY MONTH	EVERY 3MO	EVERY 6MO	EVERY YEAR

SMT MINI TANKER MAINTENANCE RECORD

DATE	MAINTENANCE PERFORMED	HOUR METER	SERVICED BY

All maintenance items must be performed according to the maintenance schedules and documented for warranty coverage to be effective.

Fuel Filter Replacement (burner)

1. Close fuel shut off valve located at the fuel tank.
2. Remove the nut securing the canister to the fuel filter body.
3. Remove the canister and the filter element.
4. Replace the element with a new one.
5. Reinstall the canister and turn on the fuel valve.
6. Attach a clear hose to the fuel pump bleeder screw on the burner and direct the hose into a suitable container.
7. Start engine, set thermostats, then turn on the burner power switch. This will allow the fuel pump in the burner to run so the fuel system can be bled of air.
8. Loosen the bleeder screw and observe the flow of fuel through the clear hose, when all air is purged from the system close the bleeder screw.
9. Check entire fuel system for leaks.
10. Set the thermostats to the desired level and the burner will ignite.

Brush Inspection (Every 300 hours)

1. Using a screwdriver, remove 2 brush holders located on the exterior of the motor housing and remove the brushes.
2. Replace brushes if less than 1/4 inch in length.

Torques Specifications

Tire Lug Nuts	95 Ft lbs.
Hitch Nuts	95 Ft lbs.
Shackles	95 Ft lbs.

TROUBLE SHOOTING

TROUBLE SHOOTING

Diesel Burner

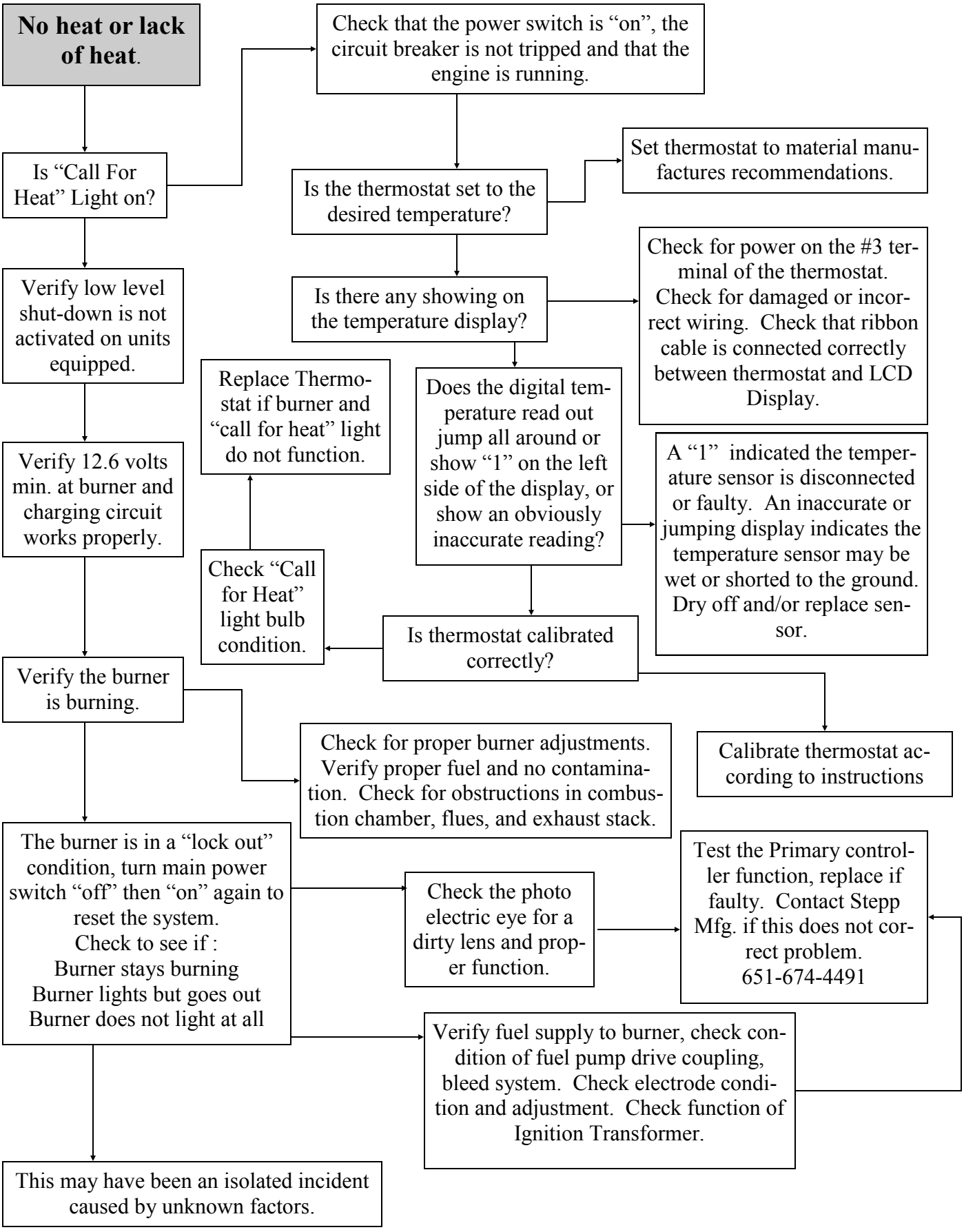

Diesel Burner Adjustments

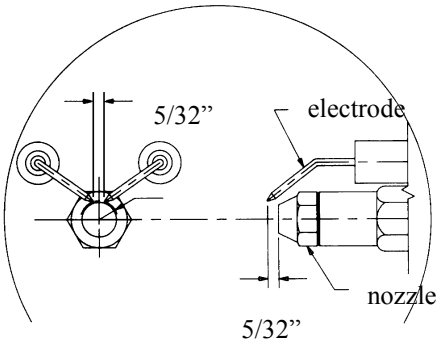

Electrode Adjustment - Fig.1

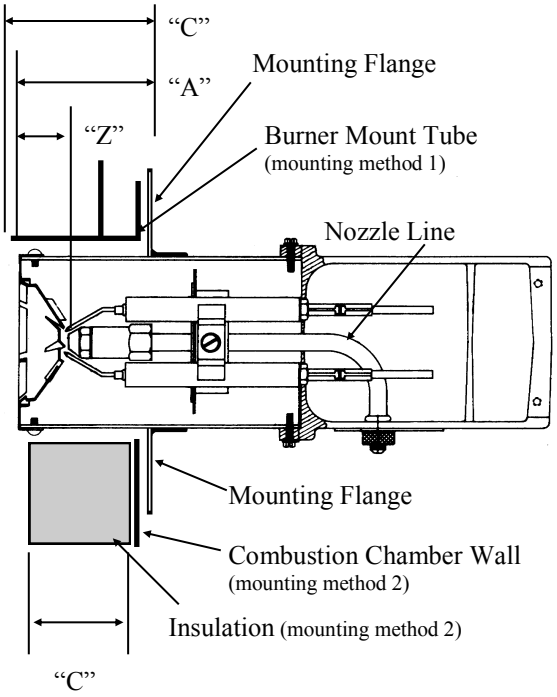

Dimensional Adjustments - Fig. 2

1. Bleed all air from fuel system through bleeder screw. See Fig. 4 (burner motor must be running).
2. Check and adjust igniter electrodes as shown in Fig. 1.
3. Verify dimensional adjustments. The "Z" in dimension is set to 1 1/8' by repositioning the nozzle line. The "A" dimension is set 1/4" less than the "C" dimension by repositioning the mounting flange. Refer to the mounting methods shown in Fig. 2.
4. Check and adjust fuel pressure to 140 psi. 100 psi minimum may be used to compensate for high altitude operations (refer to Fig. 3).
5. Set initial adjustment of air band and air shutter to number six. Ignite the burner and adjust the air supply until there is a slight amount of smoke. See Fig. 4.
6. Allow temperature to rise to at least 150º F. then readjust air supply until there is just a trace of smoke.
7. Using combustion analyzer, measure the CO_2 or O_2 levels. Then increase the air supply to *reduce* the CO_2 by 1%, or *increase* the O_2 by 1%. If an analyzer is not available, increase the air supply until the smoke just disappears.
8. Tighten all screws after final adjustments are made.

NOZZLE FLOW CHART

100 PSI	.75	.85	.90	1.00	1.10	1.20	1.25	1.35	1.50	1.65	1.75	2.00	2.25	2.50	2.75	3.00
140 PSI	.89	1.00	1.07	1.18	1.30	1.41	1.48	1.60	1.78	1.95	2.07	2.37	2.66	2.96	3.25	3.55

Fig. 3

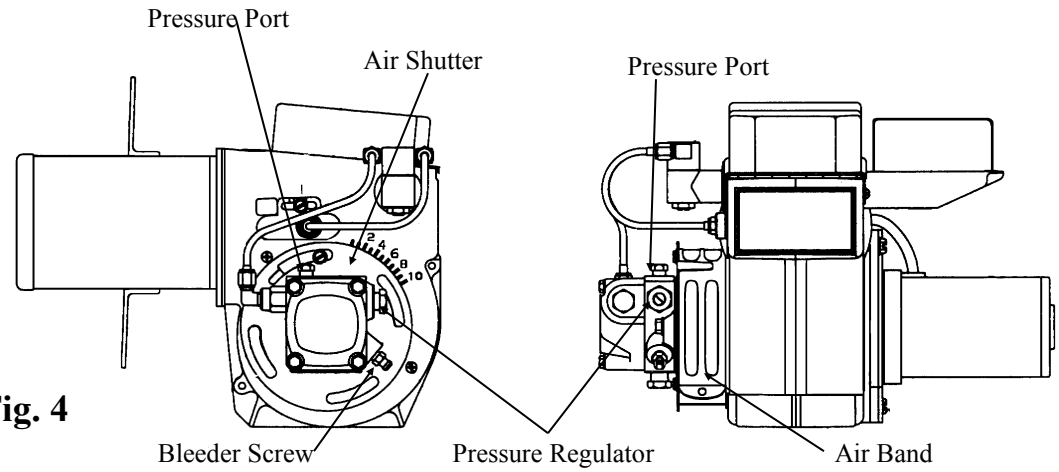

Fig. 4

Primary Controller Burner MTD/Hard Wired

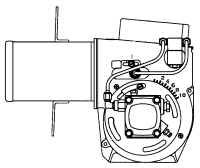

NOTE: *The primary controller can be bench tested for proper operation using an automotive type, 12 volt battery as a power source. Refer to the wiring schematics for wire identification.*

1. Remove controller from burner. Mark all wires for proper reassembly.
2. Using two test lights, or volt meters, connect one to the blue wire, and one to the white/orange wire of the controller. Connect the black leads of your test instruments to the negative (-) terminal of the battery.
3. Connect the black wire from the controller to the negative (-) terminal of the battery.
4. Connect the red, white/red, and the white wires together, then connect these three wires to battery (+) terminal. Both test instruments should show voltage for approximately 15 seconds. After 15 seconds, the controller should "lock out" and no voltage will be present.
5. Repeat step #4, only this time connect the two yellow wires from the controller together three seconds after applying power to the three wires of the controller. (This simulates the controller receiving a "flame" signal from the photo electric eye). The white/orange wire should show voltage as long as the controller is hooked to the battery. The blue wire should only show voltage for about 15 seconds. Replace the controller if it fails any of these tests.

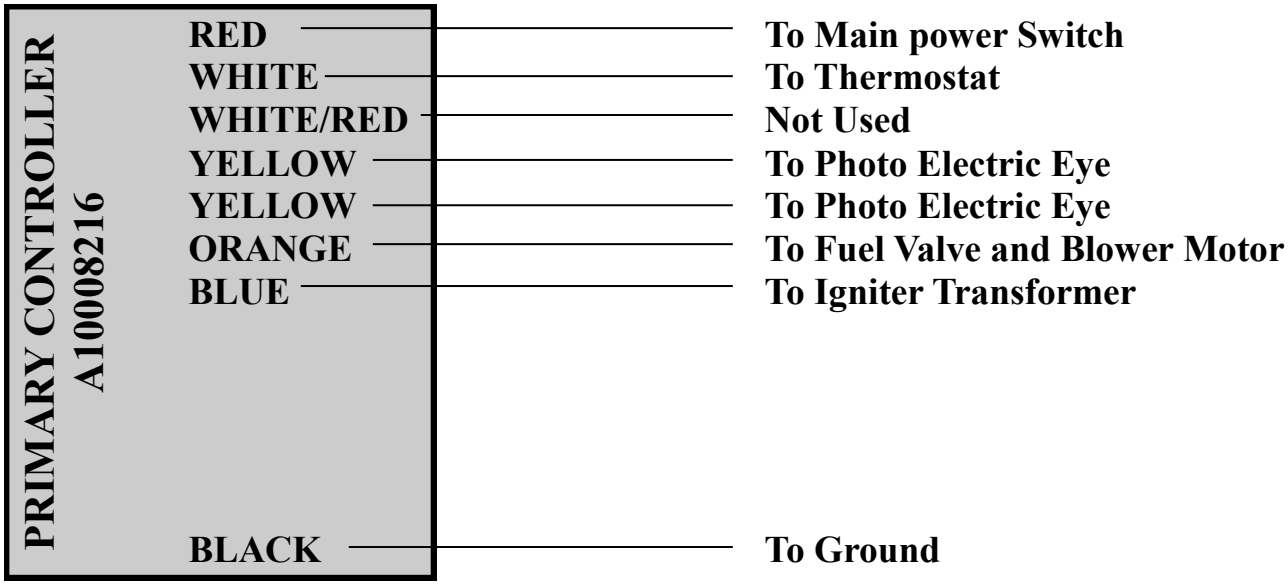

Photo Electric Eye

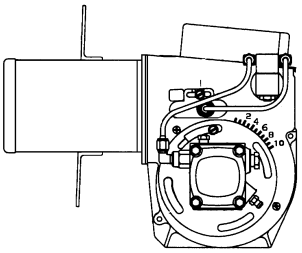

NOTE: *The Photo Electric Eye can be bench tested for proper operation using an ohm meter. Assure the lens of the Photo Electric Eye is clean prior to testing.*

1. Block off all light to the Photo Electric Eye. Test across the leads with your ohm meter; you should get an infinite resistance reading (a lot of resistance).
2. Point the Photo Electric Eye at a light source, the brighter the light, the less resistance your ohm meter will show. **CAUTION:** *Replace the Photo Electric Eye if it does not respond in this way.*

Fuel Valve

NOTE: *The Fuel Valve can be bench tested for proper operation using an automotive type 12 volt battery as a power source.*

1. Disconnect the two leads and remove the fuel lines from the fuel valve.
2. The valve should be closed when no power is available.
3. Apply 12 volts to the two leads and the valve should open. **CAUTION:** *Replace the fuel valve if it does not respond in this way.*

Ignition Transformer

WARNING: *Shock hazard, high voltage up to 20,000 volts.*

1. Assure that 12 volts is being supplied to the transformer during the ignition cycle. (Refer to the Primary Controller tests.)
2. Check electrode condition and adjustment. Replace or adjust as necessary. **CAUTION:** *Replace ignition transformer if unit won't produce sparks.*

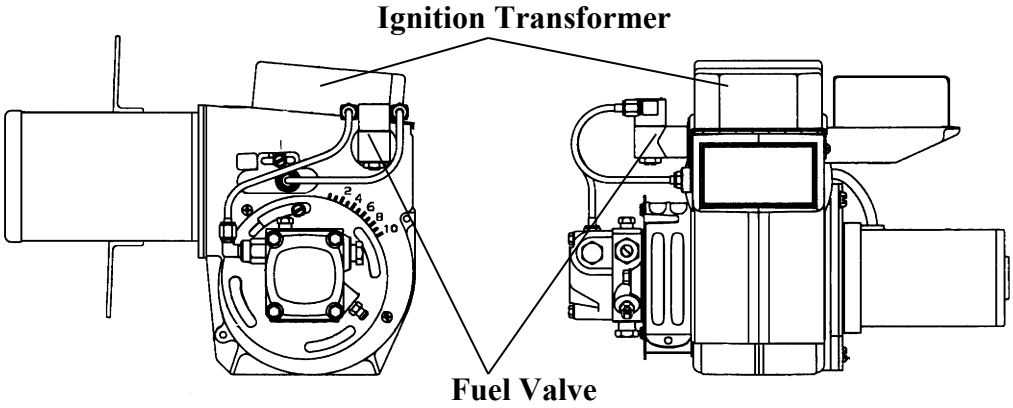

Sensor Test

The temperature sensor can be tested with a digital ohm meter. Using the chart below you can determine if the sensor is functioning properly.

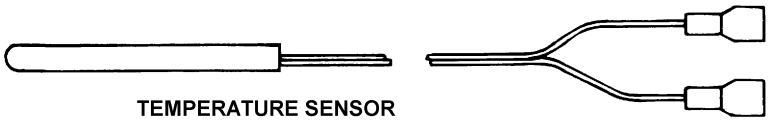

TEMPERATURE SENSOR

RESISTANCE TABLE FOR TEMPERATURE SENSORS

TEMP °F	RES OHMS	TEMP °F	RES OHMS	TEMP °F	RES OHMS	TEMP °F	RES OHMS
0	930	160	1275	320	1610	480	1937
10	952	170	1296	330	1631	490	1957
20	974	180	1317	340	1652	500	1977
30	996	190	1339	350	1672	510	1997
40	1017	200	1360	360	1693	520	2017
50	1039	210	1381	370	1713	530	2037
60	1061	220	1402	380	1734	540	2057
70	1082	230	1423	390	1754	550	2077
80	1104	240	1444	400	1775	560	2097
90	1125	250	1465	410	1795	570	2117
100	1147	260	1486	420	1816	580	2136
110	1168	270	1507	430	1836	590	2156
120	1190	280	1527	440	1856	600	2176
130	1211	290	1548	450	1876	610	2196
140	1232	300	1569	460	1897	620	2215
150	1254	310	1590	470	1917	630	2235

REPLACEMENT PARTS

Original Equipment Replacement Parts

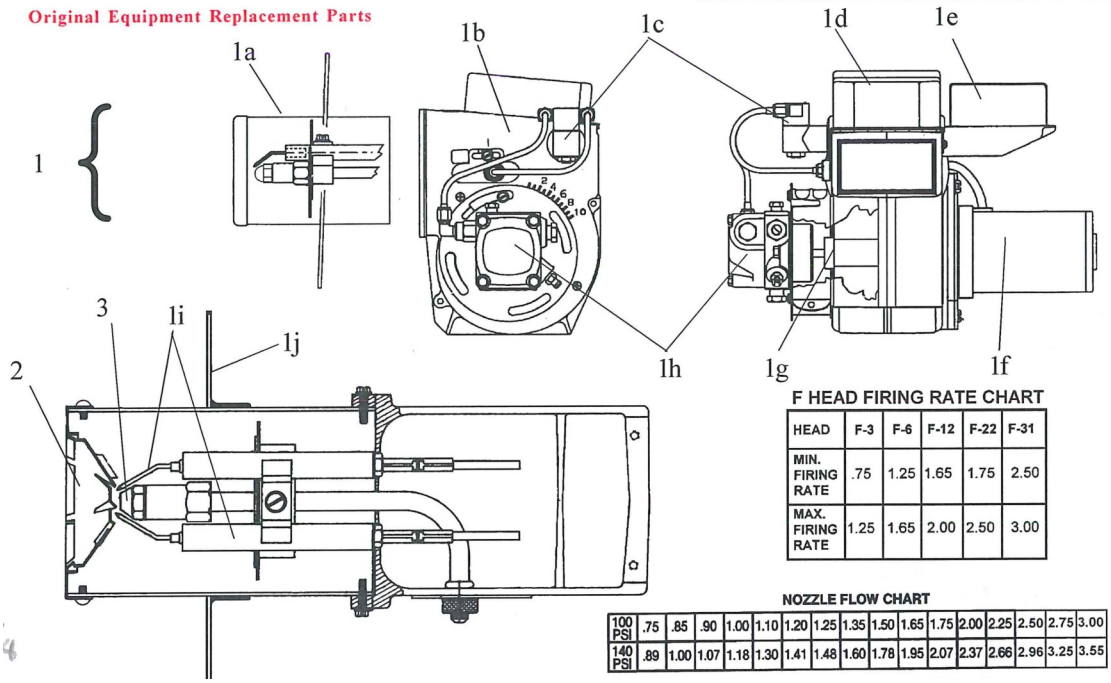

F HEAD FIRING RATE CHART

HEAD	F-3	F-6	F-12	F-22	F-31
MIN. FIRING RATE	.75	1.25	1.65	1.75	2.50
MAX. FIRING RATE	1.25	1.65	2.00	2.50	3.00

NOZZLE FLOW CHART

100 PSI	.75	.85	.90	1.00	1.10	1.20	1.25	1.35	1.50	1.65	1.75	2.00	2.25	2.50	2.75	3.00
140 PSI	.89	1.00	1.07	1.18	1.30	1.41	1.48	1.60	1.78	1.95	2.07	2.37	2.66	2.96	3.25	3.55

ITEM	QTY	DESCRIPTION	PART#
1	1	Burner assembly w/ Primary Control (less fuel retention head and nozzle)	A10008215
1	1	Burner assembly, complete w/ fuel retention head and nozzle	A10008105-004
1a	1	Air Tube	509070
1b	1	Photo electric eye (under ignition transformer)	
		-With Connectors	A10007678
		-Without Connectors	P10007720
1c	1	Valve, fuel control	509091
1d	1	Ignition Transformer	509087
1e	1	Primary Controller	P10001034
		-Weather Pack/Weather Pack	A10007216
		-Weather Pack/CPC New Style	A10008216
1f	1	Motor, blower	509092
1g	1	Coupling, pump to motor	509086
1h	1	Pump, burner fuel	509094
**	1	Pump, burner fuel– Internal Fuel Shut-off Valve	509109
1i	1	Electrode, igniter set	509089
1j	1	Mounting Flange	509071
**	1	Blower Fan Wheel	509069
2	1	Fuel retention head, F12 (for 1.65 to 2.0 gph) **(Std Replacement-vert ojk)**	P10005132
3	1	Nozzle, 1.5 gph. 80° **(Std Replacement-vert ojk)**	P10005125
**	1	Fuel Filter Element	509078

** Not Shown
Note: Indented item numbers with letter suffix are included with preceding item number.
Nozzle GPH rated at 100 psi. Match nozzle and fuel retention head with that installed.

Controls

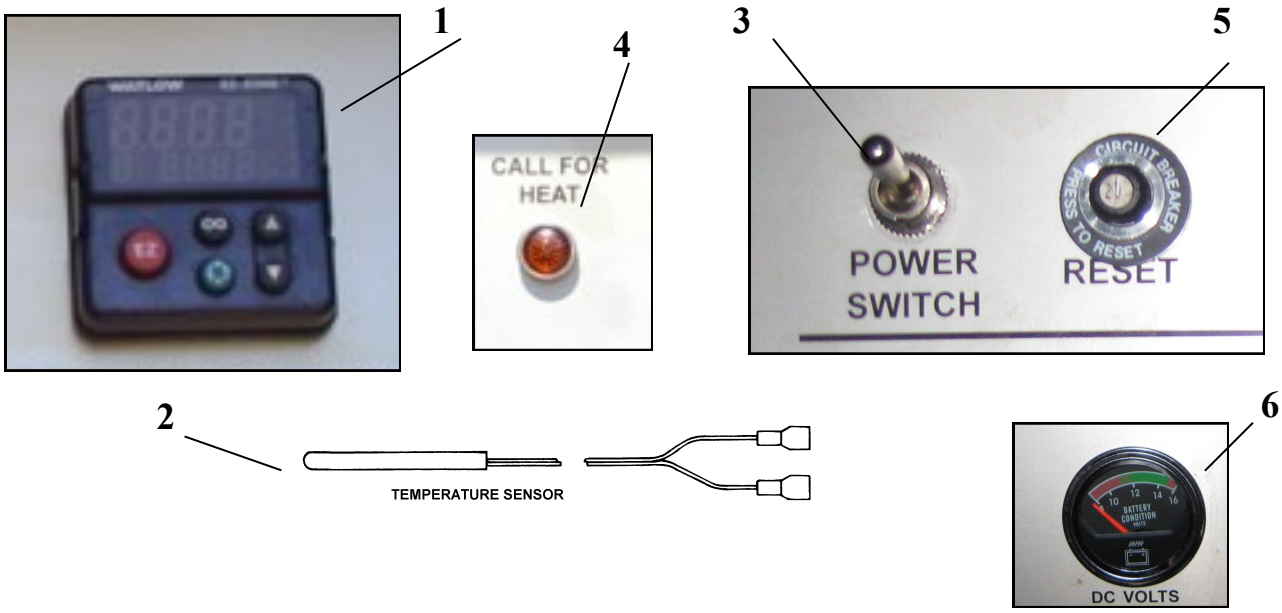

ITEM	QTY	DESCRIPTION	PART#
1	-	Thermostat, Watlow 0-550°, EZ 12V	P10003540
2	-	Sensor, RTD Watlow 0-550°	A10001017
3	-	Switch– SPDT Toggle ON/OFF	P10002869
4	-	Light– Call For Heat 12V	P10000181
5	-	20 Amp Breaker	P10000179
6	-	Volt Meter	P10000184

Overnight Heat

ITEM	QTY	DESCRIPTION	PART#
8	-	Heater 240v 3KW 2” NPT Immersion	P10007561

** Not Shown

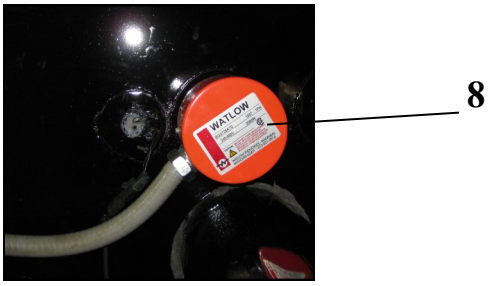

Filters

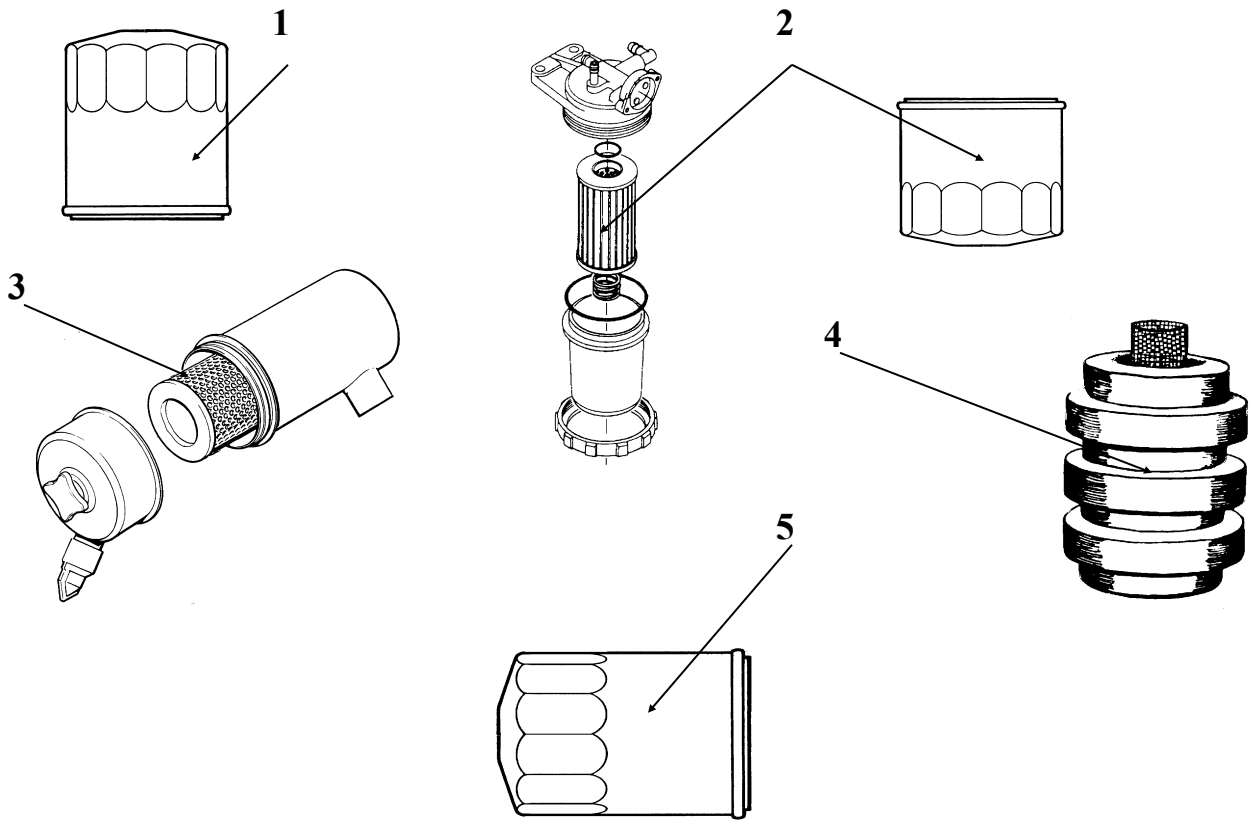

ITEM	QTY	DESCRIPTION	Z482
1	1	Oil Filter, Kabota	508054
2	1	Fuel Filter Element, Kabota	508055
3	1	Air Filter Element, Kabota	508053
4	1	Fuel Filter Element, General	509078
5	1	Hydraulic Filter, Zinga	510025
7	1	Service Kit, 400 hr. Includes 4 of item 1, 1 each of items 2 through 4, and 2 of item 5.	508061

Note: Illustrations are for parts identification only. Illustrations may not represent actual parts.

REPLACEMENT PARTS

Twist Spray Wand

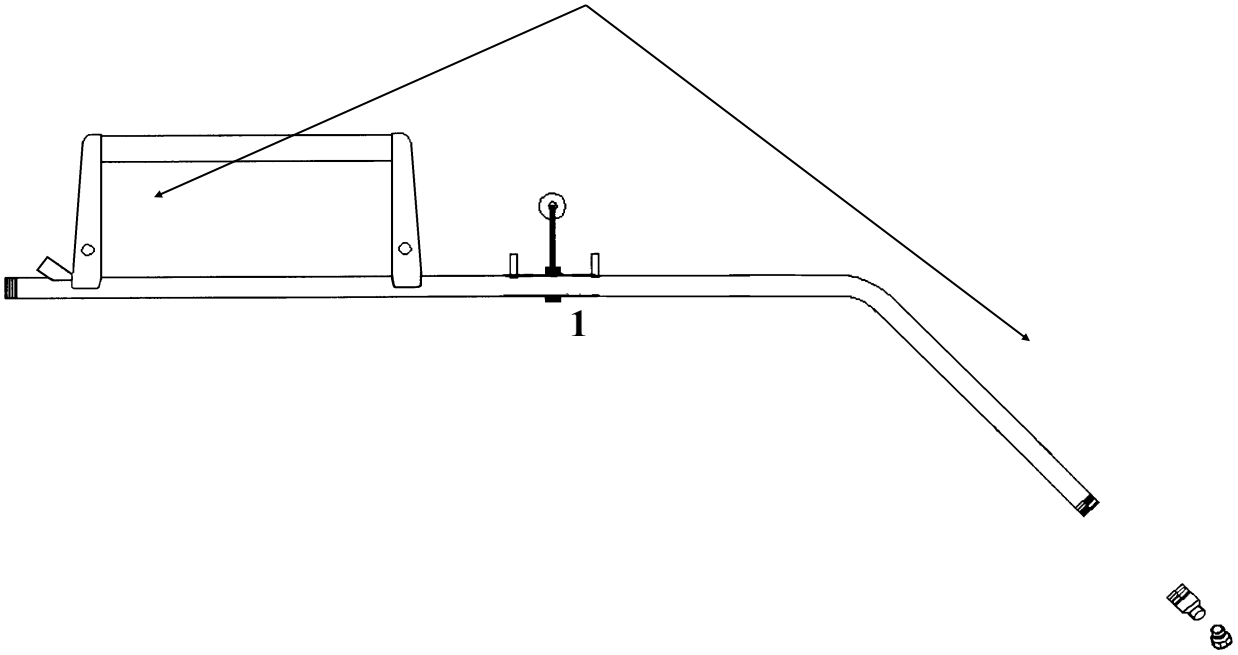

ITEM	QTY	DESCRIPTION	PART #
1	1	Wand assembly complete, steel	204004-5

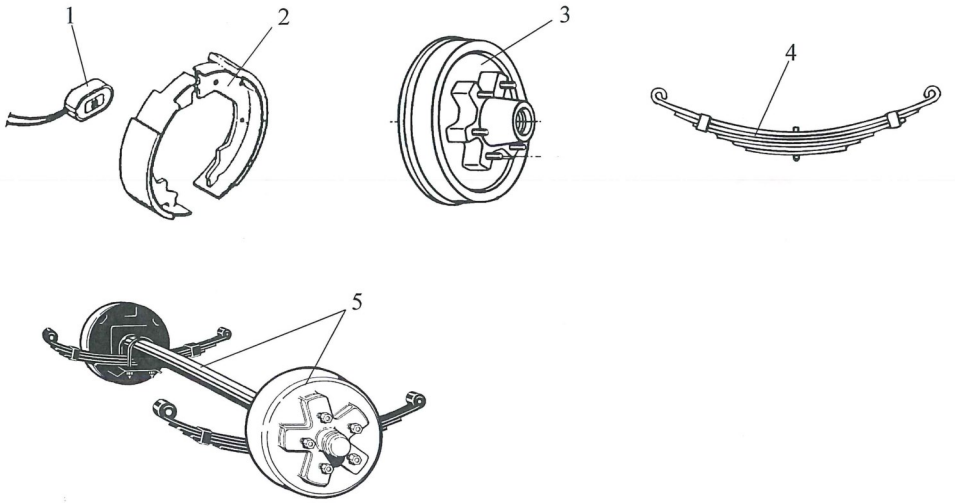

ITEM	QTY	DESCRIPTION	PART#
1	1	Magnet, electric brake (1 required for each wheel)	Give Serial #
2	1	Brake Shoe Set (1 set required for each wheel)	Give Serial #
3	1	Brake Drum and Hub assembly (1 required for each wheel)	Give Serial #
4	1	Leaf Spring assembly (1 required for each wheel)	Give Serial #
		Complete replacement axle assemblies are available and include brakes, hubs, and springs.	
5	1	Axle assembly, complete, 648duh, hydraulic brakes, for OJK 165	501067
	1	Axle assembly, complete, 648due, electric brakes, for OJK 165	501032
	2	Axle assembly, complete, 348duh, hydraulic brakes, for OJK 250	501082
	2	Axle assembly, complete, 348due, electric brakes, for OJK 250	501046
	2	Axle assembly, complete, 660due, electric brakes, for OJK 400	501006
*	4	Wheel, 5 Hole, for OJK 50, 75, 120, 250	518015
*	2	Wheel, 6 Hole, for OJK 165	518016

* - Not Shown

Note: Illustrations are for parts identification only. Illustrations may not represent actual parts.

ORDERING INFORMATION:

Orders for suspension parts must include the equipment serial number.

Orders for brake parts must include the equipment serial number and brake drum dimensions. (diameter and width) Also specify electric or hydraulic brake system.

Heating System Repair Kit

12V Diesel or Propane Heating System Repair Kit

These Kits are designed to eliminate down-time by organizing into one handy package the parts, troubleshooting procedures, and test tools, needed to complete virtually any repair of the Diesel or Propane burner systems and the electronic thermostats.

The Kit includes a comprehensive troubleshooting and repair guide, test instruments, and all the common (and some not-so-common) parts to complete most repairs.

The contents of the kit were carefully chosen to allow easy *field repairs* with the addition of only basic hand tools such as a screwdriver and wrench set.

This kit will pay for itself quickly by minimizing down-time. Keep one with each unit for maximum productivity.

Watlow W A10008216 Primary- Part # 509101C

Paktronic W A10007216 Primary Control- Part # 509101A

Watlow W A10007216 Primary Control- Part #509101B

Paktronic Diesel Burner Repair Kit - Part # 509101

Paktronic Propane Burner Repair Kit - Part # 509102

Note: Kits are shipped with a 0° - 550° thermostat.

Ortec Hose

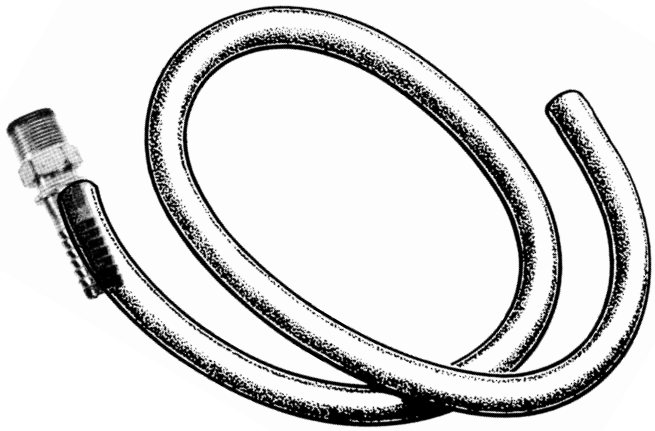

ITEM	QTY	DESCRIPTION	PART #
-	1	Hose, yellow ortec, 15 ft.	523038

Note: Illustrations are for parts identification only. Illustrations may not represent actual parts.

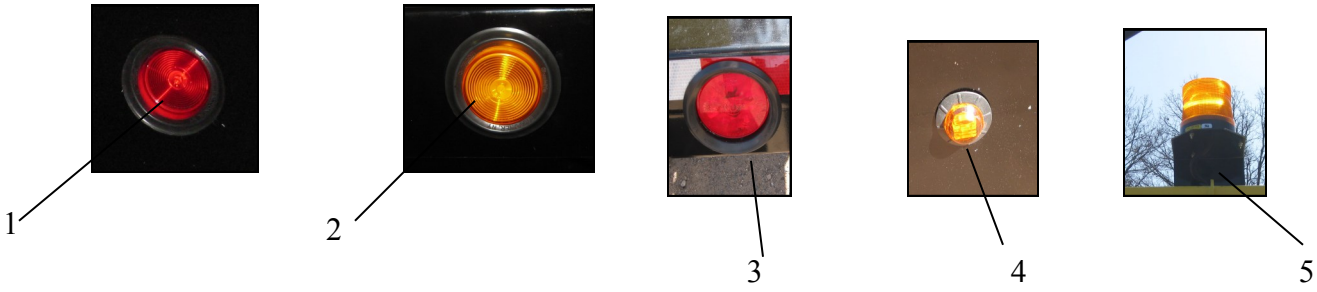

Lighting

ITEM	QTY	DESCRIPTION	PART #
1	4	Clearance LED– Red	P10002891
2	2	Clearance LED– Amber	P10002894
3	2	4” RD LED RED Light	44030R
4	2	Clearance Light—3/4” Amber	P10007246
5	1	STROBE Light– Whelen 6”	P10007572

QTY	Description– ENGINE PACKAGE	PART #
-	OIL - AMCO 300 15W 40W	603004
1	FUEL GAGE	P10000150
1	FUEL PUMP - 12V DC	P10000156
3’	HOSE - 5/16" FUEL LINE	P10001239
1	HOUR METER	P10002722
1	Z482 STRD ENGINE W/LIGHTS	P10003760-001

Quantity	Description	PART #
1	VALVE - HYD MANL 3POS 1500PSI	510005A
1	HYD PUMP - 0.66 CU IN EATON	510074
1	FILTER - SINGLE HYD W/ADAPT	A10002644
1	HYD CAP & SCREEN	P10001114
1	STRAINER - HYD 2" X 1 1/4" NPT	P10001124
7.5	OIL - HYDRAULIC - #32	P10001292
1	MOTOR -HYD 2.2 CID 2-BOLT A MT	P10007535
6	HYD HOSE - 1/2" 100R16	P10007803

QTY	Description– AGITATOR DRIVE	PART #
1	PLUG - 120/V MALE 15AMP	526174
1	TIMER - 24H/120V/30A ENCLOSURE	7459K75
2	KEY STOCK - 1/4 X 1/4	P10002019
3	CONNECTOR STRAIN RELIEF	P10002557
1	CHAIN HUB - 5016 X 1"BORE	P10004956-002
1	CHAIN ONLY - 5016	P10006438
1	GEARMOTOR-12 RPM 400"# 120/240	P10007750

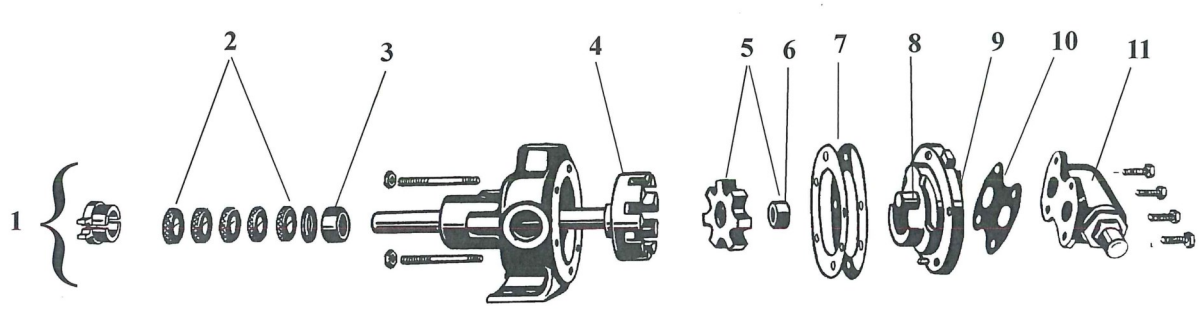

ITEM	QTY	DESCRIPTION	PART#
1	1	Pump, complete with relief valve	515006
	1	Pump, complete without relief valve, with steel rotor (OJK-50, 75, 120)	515063
	1	Pump, complete without relief valve, with standard rotor	515005
2	5	Packing seal, shaft	515019
3	1	Bushing, bracket	515041
4	1	Rotor and Shaft	515031
5	1	Idler with bushing	515015
6	1	Bushing	515053
7	1	Gasket set, head - (for setting end clearance)	515016
8	1	Idler Pin	515052
9	1	Head, for pumps without relief valve (includes # 7)	515028
	1	Head, for pumps with relief valve (includes # 7)	515027
10	1	Gasket, relief valve	515083
11	1	Relief Valve	515055

Note: Illustrations are for parts identification only. Illustrations may not represent actual parts.

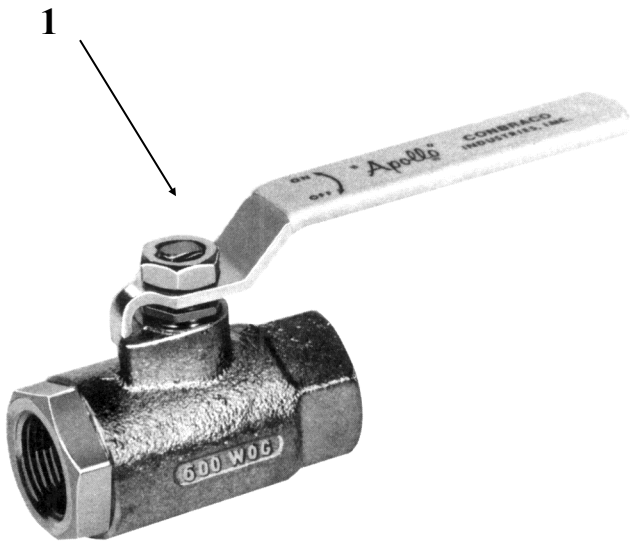

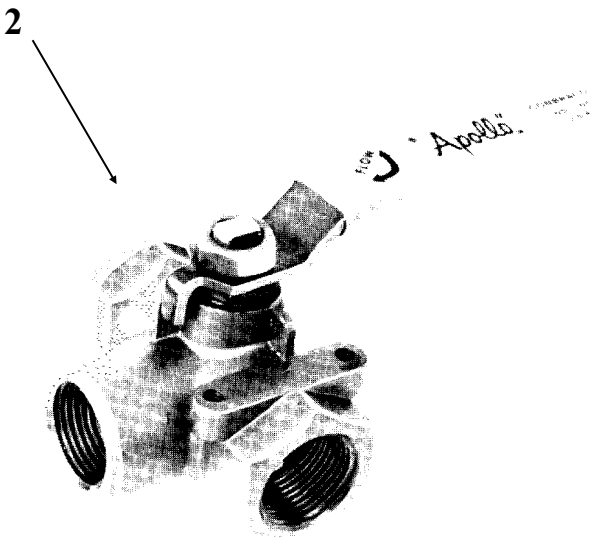

ITEM	QTY	DESCRIPTION	PART #
1	AR	2 Port Valve, Brass, 1/4"	P10000155
	AR	2 Port Valve, Brass, 1/2"	P10008268
	AR	2 Port Valve, Brass, 3/4"	P10001772
	AR	2 Port Valve, Brass, 1"	517018
	AR	2 Port Valve, Brass, 1 1/2"	P10008125
	AR	2 Port Valve, Brass, 2"	P10005993
	AR	2 Port Valve, Brass, 3"	P10004958
2	AR	3 Port Valve, Brass, 1/2"	517036
	AR	3 Port Valve, Brass, 3/4"	517022
	AR	3 Port Valve, Brass, 1"	P10004391
	AR	3 Port Valve, Brass, 1 1/2"	P10004378
	AR	3 Port Valve, Brass, 2"	P10006111
3	-	2.5" doc, draw-off valve, inside closing	A10008922
4	-	Valve, diaphragm type, 2" FNPT	517034
Not shown		Molasses Gate Valve, 2"	P10004913

AR - As Required
Note: Illustrations are for parts identification only. Illustrations may not represent actual parts.

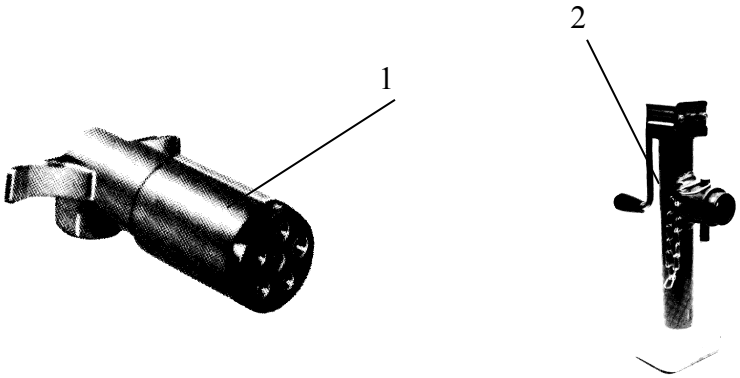

ITEM	QTY	DESCRIPTION	PART#
1	1	7 RV Light Plug	A10005162
2	1	Connector, female, 6 prong round	526031
3	1	Screw Jack– 5,000#	P10001273
4	1	Hitch– 2 5/16” Ball	901038BM
5	2	Chain– Safety w/Hook 36” GR43	P10004626

Note: Illustrations are for parts identification only. Illustrations may not represent actual parts.

NHTSA Reporting Safety Defects

If you believe that your vehicle has a defect in which could cause a crash or could cause injury or death, you should immediately inform the National Highway Traffic Safety Administration (NHTSA) in addition to notifying STEPP MANUFACTURING CO., INC..

If NHTSA receives similar complaints, it may open an investigation and if it finds that a safety defect exists in a group of vehicles, it may order a recall and remedy campaign. However, NHTSA cannot become involved in individual problems between you, your dealer, or STEPP MANUFACTURING CO., INC..

To Contact NHTSA, you may either call the Auto Safety Hotline toll-free at 1-888-327-4236 (TTY: 1-800-424-9153); go to http://www.safecar.gov; or Write to: NHTSA, US Department of Transportation, 1200 New Jersey Ave., S.E., Washington DC 20590. You can also obtain information about your motor vehicle safety from http://www.safecar.gov.

STEPP MFG™

ASPHALT MAINTENANCE EQUIPMENT

Consumer Warranty Guide

12325 River Road, North Branch, MN 55056~ Phone: 651-674-4491~ Fax: 651-674-4221 www.steppmfg.com

Introduction

Congratulations on your purchase of equipment built by Stepp Manufacturing for your asphalt maintenance needs. Your equipment has been designed and constructed to give you the most in performance, ease of use, and reliability. It is our desire that you will find operating the equipment both productive and profitable.

Warranty Procedures Through A Dealer

If your equipment requires repair, or needs parts for repair, please contact your area dealer. For repairs, the unit must be brought to the dealer for warranty. The dealer will require purchase date information, where the machine was purchased, and the Vehicle Identification Number (VIN) of the equipment. This information is needed so the dealer can submit a warranty claim. The dealer will repair your equipment, once warranty is approved, at no charge to you under the provisions of the warranty policy.

Warranty Procedures Direct Through The Factory *(when no servicing dealer is available in your area)*

Contact Stepp Manufacturing's Customer Service Department at (651) 674-4491.

In this situation, it may be advantageous for you to repair the machine and be reimbursed direct from the factory for warranty repairs. If you do not have the facilities, or the technicians, to perform the repair, the unit can be brought to a local repair facility. In either case, Stepp Manufacturing ***MUST*** be contacted and authorize the warranty repair ***PRIOR*** to any work being performed. If work is done prior to authorization, the warranty will not be honored.

If parts are required for the warranty repair, contact Customer Service at Stepp Manufacturing for replacements. When warranty replacement parts are shipped to you, a Warranty Authorization Number will be issued. If asked to return the defective parts, "tag" the defective parts with the Warranty Authorization Number, then package them in the same box the new parts were shipped in. Ten (10) business days will be allowed for return of the defective parts. If the defective part is not received back at the factory within this allotted time, the warranty will not be honored.

You will be billed for all parts shipped that require returning of defective parts. However, when the defective parts are returned and evaluated, you will receive credit for the cost of the part only. Thus, it is important that all defective parts are turned to Stepp Manufacturing in the allotted ten (10) day period.

Engine Warranty Claims

When a warranty issue develops with the engine, bring the unit to the engine manufacturer nearest authorized service center for repair. Be prepared to supply them with proof of purchase information with purchase dates.

Stepp Manufacturing cannot process engine warranty claims. However, we will be happy to offer assistance in locating the nearest service center.

Equipment Owner Responsibilities

As the equipment owner, you are responsible for:

- Using the equipment in accordance with the correct operating procedures as shown in the operators manual.
- Assuring all maintenance items are completed in accordance with the operators/maintenance manuals.
- Transporting the equipment to the place where warranty repairs can be completed.
- Supplying purchase date and VIN information to establish warranty coverage.

General Warranty Statement

Stepp Manufacturing's One (1) Year Limited Warranty

Stepp Manufacturing Co., Inc. hereby warrants, to the original purchaser of new equipment, that products manufactured by Stepp Manufacturing will be free from defects in material and workmanship for a period of one (1) year from the date of purchase from Stepp Manufacturing.

Stepp Manufacturing, at is discretion, will provide for the repair or replacement of any part found, upon examination by Stepp Manufacturing, to be defective, except as noted below. Such repair or replacement shall be free of charge to the original purchaser of new equipment for a period of one (1) year from the date of purchase, except as noted below.

No warranty is extended to cover:

- Product pump wear or damage caused by foreign objects.
- Routine maintenance, cleaning, and adjustments.
- Parts or components that have been altered, misused, improperly adjusted, or improperly maintained.
- Transportation to and from the place of warranty repair.
- Removal of materials from equipment.

The following items are covered solely by their manufacturer's warranty:

- Engines
- Hydraulic components
- Burners
- Pumps
- Axles
- Tires
- Other component parts not solely manufactured by Stepp Manufacturing

The following items are covered by a pro-rata warranty:

- Hoses that carry heated materials
- Heating elements for material hoses and wands

Disclaimer of further warranty:

Stepp Manufacturing makes no warranty, expressed or implied, other than this warranty. The implied warranties of merchantability and fitness for a particular purpose are hereby disclaimed. Repair or replacement of products or parts proving to be defective in material or workmanship shall be the exclusive remedy for breach of this warranty.

Stepp Manufacturing shall not be liable for incidental or consequential damages. Including, but not limited to, damages for inconvenience, rental or purchase of replacement equipment, loss of profits, or other loss resulting from breach of this warranty.

Stepp Manufacturing reserves the right to incorporate any changes in design into its products without obligation to make such changes on products previously manufactured.

Twelve (12) Month Pro-Rata Limited Warranty
Heated Asphalt Hose and Heating Elements

Effective for Equipment Delivered After 5/1/2012

Stepp Manufacturing Co., Inc. hereby warrants to the original purchaser, on a pro-rated basis, that the heated asphalt hose and heating elements installed on NEW Stepp Manufacturing's equipment shall be free from defects in material and workmanship for period of twelve (12) months for the heated asphalt hose and six (6) months for the heating element.

In the event that a heated asphalt material hose or a heating element fails under normal use during the warranty period, Stepp Manufacturing will supply a replacement heated asphalt hose or heating element, along with one-half (0.5) hour for installation labor on a pro-rated adjustment basis.

- If the failure occurs under normal use within the first three (3) months from date of purchase, Stepp Manufacturing will supply a replacement, and provide for one-half (0.5) hour installation labor at no charge to the customer.
- If the failure occurs under normal use within the fourth (4th) through twelfth (12th) months, Stepp Manufacturing will supply a replacement, and provide for one-half (0.5) hour installation labor on a pro-rata basis.

The pro-rated adjustment is based on the total number of months elapsed since the purchase date of the new equipment from Stepp Manufacturing. This rate is then applied to the one-half (0.5) hour labor rate and the current suggested retail price of the proper replacement heated asphalt hose or heating element supplied by Stepp Manufacturing. This is the amount the customer will have to pay. Freight will not be included in the reimbursement. If a new heated asphalt hose or heating element is needed prior to warranty inspection, you will be billed for all parts shipped that require returning of defective parts. However, when the defective parts are returned and evaluated, you will receive credit for the cost of the part only. **Thus, it is important that all defective parts are turned in to Stepp Manufacturing in the allotted ten (10) day period, or warranty will be denied.**

In no case will the warranty coverage extend beyond the six (6) month period for the heating element or the twelve (12) month period for the heated asphalt hose, from the original purchase date of the new equipment from Stepp Manufacturing. *Physical damage is not covered by this warranty*. Physical damage may include, but is not limited to:

- Broken heating element (typically caused by repeated bending to less than a one (1) foot radius).
- Heated asphalt hoses burnt from the inside (typically caused by operating the heating element in an empty hose).
- External cuts or abrasions on the heated asphalt hose (typically caused by dragging on the ground).

The chart below shows the pro-rated amount, by percentage, that will be allowed by warranty, pending examination of the heated asphalt hose or heating element.

Heated Asphalt Hose		
Failure Date	**Warranty's Responsibility**	**Customer's Responsibility**
0-3 Months *0-90 Days*	100%	0%
3-6 Months *91-180 Days*	70%	30%
6-7 Months *181-211 Days*	60%	40%
7-8 Months *212-242 Days*	50%	50%
8-9 Months *243-273 Days*	40%	60%
9-10 Months *274-304 Days*	30%	70%
10-11 Months *305-335 Days*	20%	80%
11-12 Months *336-365 Days*	10%	90%
After 12 Months	0%	100%

Heating Element		
Failure Date	**Warranty's Responsibility**	**Customer's Responsibility**
0-3 Months *0-90 Days*	100%	0%
3-4 Months *91-121 Days*	60%	40%
4-5 Months *122-152 Days*	40%	60%
5-6 Months *153-180 Days*	20%	80%
After 6 Months	0%	100%

STEPP MFG™
ASPHALT MAINTENANCE EQUIPMENT

Warranty Claim Authorization Number: _____
Call Customer Service at 651-674-4491 to obtain prior approval or warranty will be denied.
Date of Authorization Request _____

Equipment Owner		Warranty to be Performed by	
Customer Name		Company Name	
Street Address		Address	
City/State/Zip		City/State/Zip	
Equipment Model #		Contact Name	
Equipment VIN		Contact Phone #	
Hour Meter Read			
Purchase Date		Date of Malfunction	
Dealer Purchased Form		Date of Repair	

Warranty Authorization		Signature for Authorization
Date of Malfunction		X
Date of Repair		

Symptoms / Diagnostics / Action

Symptoms	Diagnostics	Action
Describe the symptoms in detail, be as specific as possible. Ex: Burner ignites and runs for 35 seconds, then goes out.	*Describe issues found, be as specific as possible. Ex: Part failed due to loose connection, resulting in misalignment and premature wear.*	*Describe action taken, be as specific as possible. Ex: Removed damaged section of wire harness, soldered new leads in place, and insulated splices w/ heat shrink tubing.*

Parts and Labor

Labor Time to Correct Problem (reimbursed at $55/hour)		Parts Used to Correct Problem		
Labor Time (in hours)	Repair Made	Part Number	Description	Qty

Parts Return

All parts returned must be tagged with the warranty authorization number and a copy of this claim. Retain all parts until credit is received from the factory. When requested, return the parts, along with this claim, to:

Stepp Manufacturing Co., Inc.
Attn: Warranty Department
12325 River Road
North Branch MN 55056

***Note**: If defective parts are not returned within 10 days, or this warranty claim does not accompany the returned parts, the claim will be denied.

Office Use Only

Date Claim/Parts Received?		Is this a warrantable claim?	Yes	No
Claim Reviewed By:		Original Invoice # for Parts		
Date of Review:				

Warranty Totals

WATLOW PROGRAMMING

Watlow 12v Series PM Temperature Controller

Operators Programming Sequence for 12 volt devices.

PN EZ-ZONE– P1003540

This programming sequence is taken from the manufacturers programming manual for this controller and reduced to eliminate the non-essential entries. Please follow the entries carefully and if any questions arise because of misunderstanding the instructions, see your supervisor or call the factory for clarification. **To view the entire EZ-Zone PM Controller Users Manual, go to www.watlow.com, search on *EZONE PM Users Manual*.**

If at any time during the entries you feel that you have entered an incorrect entry and want to restart the procedure from the beginning, simply press the Infinity key to return to Home Page from any page or parameter. After 60 seconds with no key presses, the controller reverts to the Home Page.

The EZ-Zone PM Controller has four menus that are used to determine the configuration and operation of the controller. They are the Home Page, Setup Page, Operations Parameters Page, and the Factory Page. If you are installing the EZ-Zone PM Controller, you will need to determine the proper settings for all pages. The controller is preset at the factory prior to delivery of the equipment and is ready for operations. Always confirm that the controller is programmed correctly and operating correctly under normal operating conditions.

Caution: Pay particular attention to the h.SP (High Temperature Set point) setting for max. product application temperature that is entered on the Setup Page at step 7-8.

Do not set the High Temperature Set Point any higher than the product manufacturer maximum application temperature recommendations. Do not hesitate to ask your supervisor or call the factory for the correct setting if any questions or concerns arise.

Watlow Series PM-12 volt controller
Sample Display Illustrations

- This display shows a typical temperature selection by the operator.
- Upper display shows actual product temperature in red color.
- Lower display shows operator desired maximum temp setting in green color.
- Set the desired maximum temp with the up and down keys.

Operator will not be able to exceed the maximum temperature set point as shown in the programming procedure in the following pages.
Do not hesitate to ask your supervisor for the correct setting if any questions or concerns arise.

Watlow Series PM-12volt Temperature Controller

Operators Programming Sequence for 12 volt devices

This programming sequence is taken from the manufacturers programming manual for this controller and condensed to eliminate the non-essential entries for ease of setup. Please follow the entries carefully and if any questions arise because of misunderstanding the instructions, please call the manufacturer for clarification.

If at any time during the entries you feel that you have entered an incorrect entry and want to restart the procedure from the beginning, simply press the up arrow and the down arrow at the same time to erase all entries and begin the procedure from the beginning.

Menu Structure and Programming

The Series PM Controller has four menus that are used to determine the configuration and operation of the controller. They are the Home Menu, Setup Menu, Operations Menu and the Factory Menu. If you are installing the Series PM Controller, you will need to determine the proper settings for all menus. If the controller is already installed in the equipment that you have purchased, you may only need to set a few of the parameters to adjust the controller to your specific usage of the equipment. The Setup Menu displays the parameters that configure the Series PM Controller to fit your application. When installed on new equipment, the controller is preset at the factory prior to delivery of the equipment and is ready for operations. Always confirm that the controller is programmed correctly and operating correctly under normal operating conditions.

Caution: Pay particular attention to the h.SP setting for max. product temperature. Do not set any higher than the product manufacturer maximum application temperature. Do not hesitate to ask your supervisor for the correct setting if any questions or concerns arise.

Watlow Series PM-12volt Temperature Controller

Operators Programming Sequence for 12 volt devices

Home Menu:

Procedure for programming the Series PM-12 volt Watlow Control.

Step 1: Connect all wires to Watlow control including RTD (temp sensor).

Step 2: Connect power to Watlow controller.

Step 3: Enter the Setup menu. (press both the **up and down** arrow keys for 6 seconds). **A1** will appear in the upper display and **SEt** will appear in the lower display.

Note: ***You will have to pass through the Operations menu to get to the Setup menu. Hold the up and down arrow keys simultaneously for 6 seconds to step through the menus.***

Step 4: Once **A1** is in the upper display, and **SEt** is in the lower display, you are in the Setup menu. If not, press the **infinity key** to return to the Home page and redo step 3.

Step 5: Press the **Advance key**. Use the **up or down** keys to change values.

	Parameter	Value	Description	Caution
5-1	SEn	ro.1H	sensor type	Do not enter { rl.OH }
	Advance key			
5-2	rt.L	2	RTD leads	
	Advance key			
5-3	FiL	0.5	Filler type	
	Advance key			
5-4	i.Er	off	error latching	
	Advance key			
5-5	dEC	0	decimal	
	Advance key			

Step 6: After pressing the **Advance key,** after parameter **dEC,** you will return to the parameter .**SEn.** Press the **infinity** key to return to the Setup menu. Display will show **{ Ai Set }.**

Step 7: Press either the **up or down** key to select the Loop submenu**. LOOP** will be in the upper display and **SEt** will be in the lower display. If this is shown, press the **advance key** to enter the Loop submenu. (once in the submenu, use the **up or down** key to change the parameter values).

	Parameter	Value	Description
7-1	**h.Ag**	**on.of**	**heat algorithm**
	Advance key		
7-2	**C.Ag**	**off**	**cool algorithm**
	Advance key		
7-3	**UfA**	**off**	**user fail action**
	Advance key		
7-4	**fAiL**	**off**	**input error failure**
	Advance key		
7-5	**LodE**	**no**	**open loop detect enable**
	Advance key		
7-6	**rP**	**off**	**ramp action**
	Advance key		
7-7	**L.SP**	**0 degrees**	**low temperature set point (degrees)**
	Advance key		
7-8	**h.SP**	**250 or 550**	**high temperature set point (degrees)**
	Advance key		
7-9	**SP.Lo**	**-100.0**	**set point, low limit open loop**
	Advance key		
7-10	**SP.Hi**	**100.0**	**set point, high limit open loop**
	Advance key		

Step 8: Pressing the **advance key** after parameter **SP.hi** will return you to the parameter **h.Ag.** Press the **infinity key** once to return to the setup menu.

Step 9: Use the **up or down** keys to select the output submenu**. otPt** will be in the upper display, and **SEt** will be in lower display. Press the **Advance key** to enter the submenu.

	Parameter	Value	Description
	(use the **up or down** key to change parameter values)		
9-1	**Fn**	**heat**	**Function**
	Advance key		
9-2	**o.tb**	**20.0**	**time base**
	Advance key		
9-3	**O.LO**	**0%**	**low power scale**
	Advance key		
9-4	**o.h1**	**100%**	**high power scale**
	Advance key		

Step 10: Pressing the **advance key** after parameter o.h1 will return you to parameter Fn. Press the **infinity key** to return to the output submenu.

Step 11: Use the **up or down** keys to select the global submenu **gLbL** will be in the upper dis play and **SEt** will be in the lower display. Press the **advance key** to enter the global menu.

	Parameter	Value	Description
11-1	**C_F**	**F**	**display units**
	Advance key		
11-2	**AC.LF**	**60**	**AC line frequency**
	Advance key		

Step 12: After pressing the **advance key** at parameter **AC.LF** will advance you back to parameter **C_F.** Press the **infinity key** once to return to the global submenu.

Step 13: Use the **up or down** keys to select the communication submenu. **Cor7** will be in the upper display and **SEt** will be in the lower display. Press the **advance key** to enter the communications submenu.

	Parameter	Value	Description
13-1	**Ad.5**	**1**	**Address Standard Bus**
	Advance key		

Step 14: Pressing the **advance key** on parameter **Ad.5** will advance you back to the same parameter, **Ie**. you will still see parameter **Ad.5** displayed. Press the **infinity key** once to return to the communications sub menu.

Step 15. Press the **infinity key** to return to the Home page.

Step 16. From the Home page, press both the **up and down** keys for (3) seconds, **Ai** will appear in the upper display and **oPEr** will appear in the lower display.

Operations Page

Step 17: Once **F1i** is in the upper display and **oPEr** is in the lower display, you are at the Operations menu. If not, press the **infinity key** to return to the Home menu and redo step 16.

Step 18: Press the **up and down** keys until **LooP** is in the upper display and **oPEr** is in the lower display. Press the **advance key** to enter the **LooP** sub menu.

	Parameter	Value	Description
	(use the up or down keys to change values)		
18-1	**C.r7**	**auto**	**control mode**
	Advance key		
18-2	**C.SP**	**75**	**closed loop setpoint**
	Advance key		

	Parameter	Value	Description
18-3	**id.5**	**75 degree F.**	**Idle set point**
	Advance key		
18-4	**h.hy**	**3.0 degree F.**	**Heat hysteresis**
	Advance key	**reads 3 on display**	
18-5	**o.SP**	**0.0%**	**Open loop set point**
	Advance key		

Step 19: Pressing the **advance key** at parameter **o.SP** will advance you back to parameter **C.r7** Press the **infinity key** once to return you to operations Loop menu. Press the **infinity key** again to return you to the Home Page.

Step 20: Enter the Factory Page by pressing the **advance key** and **infinity keys** together and holding them for six (6) seconds. **CUSt** will be in the upper display and **FCty** will be in the lower display.

Factory Page

Step 21: Once **CUSt** is in the upper display and **FCty** is in the lower display, you are in the Factory menu. If not, press the **infinity key** to return to the Home Page and redo step 20.

Step 22: Press the advance key if **CUSt** is in the upper display and **FCty** is in the lower display. The upper display will now read **1** and the lower display will read **CUSt** . Press the **advance key** again.

Step 23: The upper display will read **AC.Pu** and the lower display will read **PAr** . If the upper display does not read this way, use the **up and down** keys to change the value. Once the value has been changed, press the **infinity key** once.

Step 24: The upper display will read **1** and the lower display will read **CUSt** . Use the **up or down** keys to change the upper display to read **2** , press the **advance key.**

Step 25: The upper display will read **AC.SP** and the lower display will read **PAr** . If the upper display reads differently, use the **up or down** keys to change it to **AC.SP** Once complete, press the **infinity key** once.

Step 26: The upper display will read **2** and the lower display will read **CUSt** . Use the **up or down** keys to change the upper display to read **3** . Press the **advance key** once.

Step 27: The upper display will read some parameter or other, and the lower display will read **PAr** , Use the **up or down** keys to change the upper display to read **none.**

Once complete, press the infinity key.

Step 28: Repeat steps 26 and 27 for display values of **4** through **2**, changing each parameter to **nonE.**

Note: ***The upper display will show the previous value you changed. You must increment this value from 4 through 20!***

Step 29: When all 20 parameters are set, press the **infinity key** once to return you to the main Factory Page, **CUSt** will be in the upper display and **FCty** will be in the lower display.

Step 30: Use the **up or down** keys to move to the Lockout submenu. **LoC** will be in the upper display and **FCty** will be in the lower display. Press the **advance key** to enter the Lock out submenu.

	Parameter	**Value**	**Description**
	(use the up or down keys to change parameter values)		
30-1	**LoC.o**	**2**	**Lock Operations Page**
	Advance key		
30-2	**rLoC**	**1**	**Read Lockout Security**
	Advance key		
30-3	**SLoC**	**1**	**Set Lockout Security**
	Advance key		

Step 31: Pressing the **advance key** at parameter **SLoC** will advance you to back to parameter **LoC.o**. Press the **infinity key** to return you to the Lockout submenu.

Step 32: Press the **infinity key** again to return you to the Home page.

Congratulations! Programming is Complete.

SCHEMATICS

ONE BURNER CONTROL WIRING

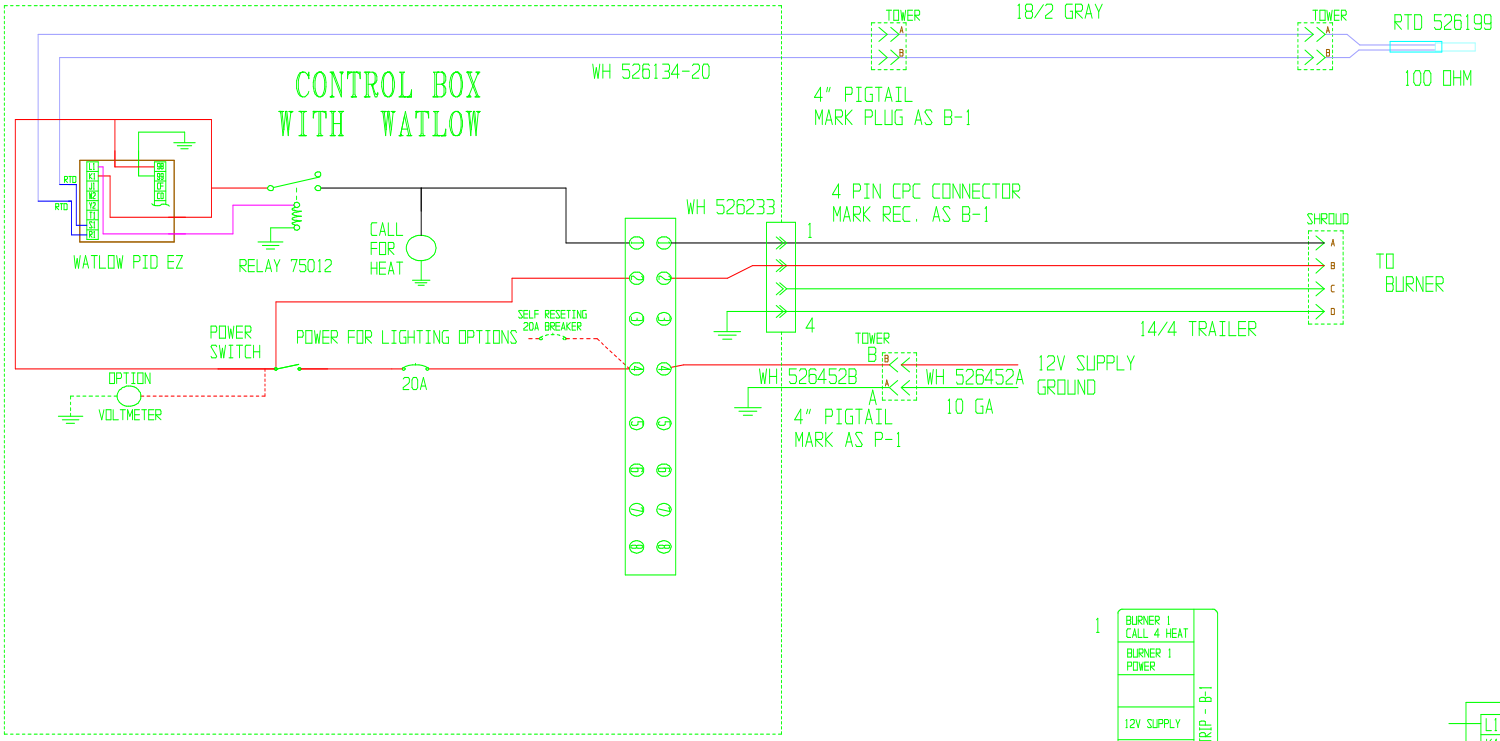

NOTE: CONNECT GROUND WIRES TO GROUNDING BAR IN CONTROL BOX

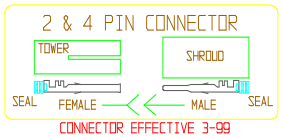

CONNECTOR EFFECTIVE 3-99

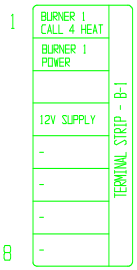

TERMINAL STRIP LABEL

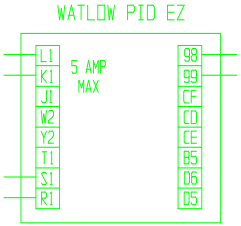

SHOP NOTES	MACHINE CODE			
STANDARD SHOP TOLERANCE UNLESS OTHERWISE NOTED: ±1/16" & ±1°	LOCK FORMER: -	STEPP MFG CO INC NORTH BRANCH, MN. 55056	ROUTING: -	PROJECT:
	WIEDEMANN: -		CAGE CODE: 06447	ASS'Y: ONE BURNER CONTROL
	LARGE BRAKE: -		DWN: 4-08 DWN BY: JD	PART NAME: WIRING DIAGRAM
			REV: -	FILE NAME: 12V1B-WAT-EZ
			INV NO: -	INV AMT EA: - QTY: 1
			MAT'L: AS NOTED	JOB NO: JOB QTY:

NOT TO BE REPRODUCED IN ANY FORM WITHOUT THE EXPRESSED WRITTEN PERMISSION OF STEPP MFG CO INC

HYDRAULIC OIL MSDS

MATERIAL SAFETY DATA SHEET

SECTION 1	PRODUCT AND COMPANY IDENTIFICATION

PRODUCT

Product Name: **UNIVIS N 32**
Product Description: Base Oil and Additives
Product Code: 8259
Intended Use: Hydraulic fluid

COMPANY IDENTIFICATION

Supplier: **Canada Imperial Oil Limited, An Affliate of Exxon Mobil Corporation**
P.O. Box 4029, Station A
Calgary, ALBERTA. T2P 3M9 Canada

24 Hour Health Emergency	519-339-2145
Transportation Emergency Phone	519-339-2145
Supplier General Contact	1-800-567-3776

SECTION 2	COMPOSITION / INFORMATION ON INGREDIENTS

Reportable Hazardous Substance(s) or Complex Substance(s)

Name	CAS#	Concentration*
HYDROTREATED LIGHT NAPHTHENIC DISTILLATE (PETROLEUM)	64742-53-6	20 - 30%

* All concentrations are percent by weight unless material is a gas. Gas concentrations are in percent by volume.

SECTION 3	HAZARDS IDENTIFICATION

This material is not considered to be hazardous according to regulatory guidelines (see (M)SDS Section 15).

POTENTIAL HEALTH EFFECTS

Low order of toxicity. Excessive exposure may result in eye, skin, or respiratory irritation. High-pressure injection under skin may cause serious damage.

NFPA Hazard ID:	Health:	0	Flammability:	1	Reactivity: 0
HMIS Hazard ID:	Health:	0	Flammability:	1	Reactivity: 0

NOTE: This material should not be used for any other purpose than the intended use in Section 1 without expert advice. Health studies have shown that chemical exposure may cause potential human health risks which may vary from person to person.

SECTION 4	FIRST AID MEASURES

INHALATION

Remove from further exposure. For those providing assistance, avoid exposure to yourself or others. Use adequate respiratory protection. If respiratory irritation, dizziness, nausea, or unconsciousness occurs, seek immediate medical assistance. If breathing has stopped, assist ventilation with a mechanical device or use mouth-to-mouth resuscitation.

SKIN CONTACT

Wash contact areas with soap and water. If product is injected into or under the skin, or into any part of the body, regardless of the appearance of the wound or its size, the individual should be evaluated immediately by a physician as a surgical emergency. Even though initial symptoms from high pressure injection may be minimal or absent, early surgical treatment within the first few hours may significantly reduce the ultimate extent of injury.

EYE CONTACT

Flush thoroughly with water. If irritation occurs, get medical assistance.

INGESTION

First aid is normally not required. Seek medical attention if discomfort occurs.

SECTION 5	FIRE FIGHTING MEASURES

EXTINGUISHING MEDIA

Appropriate Extinguishing Media: Use water fog, foam, dry chemical or carbon dioxide (CO2) to extinguish flames.

Inappropriate Extinguishing Media: Straight Streams of Water

FIRE FIGHTING

Fire Fighting Instructions: Evacuate area. Prevent runoff from fire control or dilution from entering streams, sewers, or drinking water supply. Firefighters should use standard protective equipment and in enclosed spaces, self-contained breathing apparatus (SCBA). Use water spray to cool fire exposed surfaces and to protect personnel.

Unusual Fire Hazards: Pressurized mists may form a flammable mixture.

Hazardous Combustion Products: Smoke, Fume, Sulfur oxides, Aldehydes, Oxides of carbon, Incomplete combustion products

FLAMMABILITY PROPERTIES

Flash Point [Method]: 165C (329F) [ASTM D-93]
Flammable Limits (Approximate volume % in air): LEL: 0.9 UEL: 7.0
Autoignition Temperature: N/D

MATERIAL SAFETY DATA SHEET

SECTION 1	PRODUCT AND COMPANY IDENTIFICATION

PRODUCT

Product Name: **UNIVIS N 32**
Product Description: Base Oil and Additives
Product Code: 8259
Intended Use: Hydraulic fluid

COMPANY IDENTIFICATION

Supplier: **Canada Imperial Oil Limited, An Affliate of Exxon Mobil Corporation**
P.O. Box 4029, Station A
Calgary, ALBERTA. T2P 3M9 Canada

24 Hour Health Emergency	519-339-2145
Transportation Emergency Phone	519-339-2145
Supplier General Contact	1-800-567-3776

SECTION 2	COMPOSITION / INFORMATION ON INGREDIENTS

Reportable Hazardous Substance(s) or Complex Substance(s)

Name	CAS#	Concentration*
HYDROTREATED LIGHT NAPHTHENIC DISTILLATE (PETROLEUM)	64742-53-6	20 - 30%

* All concentrations are percent by weight unless material is a gas. Gas concentrations are in percent by volume.

SECTION 3	HAZARDS IDENTIFICATION

This material is not considered to be hazardous according to regulatory guidelines (see (M)SDS Section 15).

POTENTIAL HEALTH EFFECTS

Low order of toxicity. Excessive exposure may result in eye, skin, or respiratory irritation. High-pressure injection under skin may cause serious damage.

NFPA Hazard ID:	Health:	0	Flammability:	1	Reactivity: 0
HMIS Hazard ID:	Health:	0	Flammability:	1	Reactivity: 0

NOTE: This material should not be used for any other purpose than the intended use in Section 1 without expert advice. Health studies have shown that chemical exposure may cause potential human health risks which may vary from person to person.

SECTION 4	FIRST AID MEASURES

INHALATION

Remove from further exposure. For those providing assistance, avoid exposure to yourself or others. Use adequate respiratory protection. If respiratory irritation, dizziness, nausea, or unconsciousness occurs, seek immediate medical assistance. If breathing has stopped, assist ventilation with a mechanical device or use mouth-to-mouth resuscitation.

SKIN CONTACT

Wash contact areas with soap and water. If product is injected into or under the skin, or into any part of the body, regardless of the appearance of the wound or its size, the individual should be evaluated immediately by a physician as a surgical emergency. Even though initial symptoms from high pressure injection may be minimal or absent, early surgical treatment within the first few hours may significantly reduce the ultimate extent of injury.

EYE CONTACT

Flush thoroughly with water. If irritation occurs, get medical assistance.

INGESTION

First aid is normally not required. Seek medical attention if discomfort occurs.

SECTION 5	FIRE FIGHTING MEASURES

EXTINGUISHING MEDIA

Appropriate Extinguishing Media: Use water fog, foam, dry chemical or carbon dioxide (CO2) to extinguish flames.

Inappropriate Extinguishing Media: Straight Streams of Water

FIRE FIGHTING

Fire Fighting Instructions: Evacuate area. Prevent runoff from fire control or dilution from entering streams, sewers, or drinking water supply. Firefighters should use standard protective equipment and in enclosed spaces, self-contained breathing apparatus (SCBA). Use water spray to cool fire exposed surfaces and to protect personnel.

Unusual Fire Hazards: Pressurized mists may form a flammable mixture.

Hazardous Combustion Products: Smoke, Fume, Sulfur oxides, Aldehydes, Oxides of carbon, Incomplete combustion products

FLAMMABILITY PROPERTIES

Flash Point [Method]: 165C (329F) [ASTM D-93]
Flammable Limits (Approximate volume % in air): LEL: 0.9 UEL: 7.0
Autoignition Temperature: N/D

SECTION 6	ACCIDENTAL RELEASE MEASURES

NOTIFICATION PROCEDURES

In the event of a spill or accidental release, notify relevant authorities in accordance with all applicable regulations. U.S. regulations require reporting releases of this material to the environment which exceed the reportable quantity or oil spills which could reach any waterway including intermittent dry creeks. The National Response Center can be reached at (800)424-8802.

SPILL MANAGEMENT

Land Spill: Stop leak if you can do it without risk. Recover by pumping or with suitable absorbent.

Water Spill: Stop leak if you can do it without risk. Confine the spill immediately with booms. Warn other shipping. Remove from the surface by skimming or with suitable absorbents. Seek the advice of a specialist before using dispersants.

Water spill and land spill recommendations are based on the most likely spill scenario for this material; however, geographic conditions, wind, temperature, (and in the case of a water spill) wave and current direction and speed may greatly influence the appropriate action to be taken. For this reason, local experts should be consulted. Note: Local regulations may prescribe or limit action to be taken.

ENVIRONMENTAL PRECAUTIONS

Large Spills: Dike far ahead of liquid spill for later recovery and disposal. Prevent entry into waterways, sewers, basements or confined areas.

SECTION 7	HANDLING AND STORAGE

HANDLING

Prevent small spills and leakage to avoid slip hazard.

Static Accumulator: This material is a static accumulator.

STORAGE

Do not store in open or unlabelled containers.

SECTION 8	EXPOSURE CONTROLS / PERSONAL PROTECTION

Exposure limits/standards for materials that can be formed when handling this product: When mists / aerosols can occur, the following are recommended: 5 mg/m³ - ACGIH TLV, 10 mg/m³ - ACGIH STEL, 5 mg/m³ - OSHA PEL.

NOTE: Limits/standards shown for guidance only. Follow applicable regulations.

ENGINEERING CONTROLS

The level of protection and types of controls necessary will vary depending upon potential exposure conditions. Control measures to consider:

No special requirements under ordinary conditions of use and with adequate ventilation.

PERSONAL PROTECTION

Personal protective equipment selections vary based on potential exposure conditions such as applications, handling practices, concentration and ventilation. Information on the selection of protective equipment for use with this material, as provided below, is based upon intended, normal usage.

Respiratory Protection: If engineering controls do not maintain airborne contaminant concentrations at a level which is adequate to protect worker health, an approved respirator may be appropriate. Respirator selection, use, and maintenance must be in accordance with regulatory requirements, if applicable. Types of respirators to be considered for this material include:

No special requirements under ordinary conditions of use and with adequate ventilation.

For high airborne concentrations, use an approved supplied-air respirator, operated in positive pressure mode. Supplied air respirators with an escape bottle may be appropriate when oxygen levels are inadequate, gas/vapor warning properties are poor, or if air purifying filter capacity/rating may be exceeded.

Hand Protection: Any specific glove information provided is based on published literature and glove manufacturer data. Work conditions can greatly effect glove durability; inspect and replace worn or damaged gloves. The types of gloves to be considered for this material include:

No protection is ordinarily required under normal conditions of use.

Eye Protection: If contact is likely, safety glasses with side shields are recommended.

Skin and Body Protection: Any specific clothing information provided is based on published literature or manufacturer data. The types of clothing to be considered for this material include:

No skin protection is ordinarily required under normal conditions of use. In accordance with good industrial hygiene practices, precautions should be taken to avoid skin contact.

Specific Hygiene Measures: Always observe good personal hygiene measures, such as washing after handling the material and before eating, drinking, and/or smoking. Routinely wash work clothing and protective equipment to remove contaminants. Discard contaminated clothing and footwear that cannot be cleaned. Practice good housekeeping.

ENVIRONMENTAL CONTROLS

See Sections 6, 7, 12, 13.

SECTION 9	PHYSICAL AND CHEMICAL PROPERTIES

Typical physical and chemical properties are given below. Consult the Supplier in Section 1 for additional data.

GENERAL INFORMATION

Physical State: Liquid
Color: Yellow
Odor: Characteristic
Odor Threshold: N/D

IMPORTANT HEALTH, SAFETY, AND ENVIRONMENTAL INFORMATION

Relative Density (at 15 C): 0.87
Flash Point [Method]: 165C (329F) [ASTM D-93]
Flammable Limits (Approximate volume % in air): LEL: 0.9 UEL: 7.0
Autoignition Temperature: N/D
Boiling Point / Range: 229C (444F) - 512C (954F)
Vapor Density (Air = 1): N/D
Vapor Pressure: [N/D at 40 °C] | < 1 kPa (7.5 mm Hg) at 38C
Evaporation Rate (n-butyl acetate = 1): < 0.1
pH: N/A
Log Pow (n-Octanol/Water Partition Coefficient): > 3.5
Solubility in Water: Negligible
Viscosity: 32 cSt (32 mm2/sec) at 40 C
Oxidizing Properties: See Sections 3, 15, 16.

OTHER INFORMATION

Freezing Point: N/D
Melting Point: N/A
Pour Point: -48°C (-54°F)
DMSO Extract (mineral oil only), IP-346: < 3 %wt

SECTION 10	STABILITY AND REACTIVITY

STABILITY: Material is stable under normal conditions.

CONDITIONS TO AVOID: Excessive heat. High energy sources of ignition.

MATERIALS TO AVOID: Strong oxidizers

HAZARDOUS DECOMPOSITION PRODUCTS: Material does not decompose at ambient temperatures.

HAZARDOUS POLYMERIZATION: Will not occur.

SECTION 11	TOXICOLOGICAL INFORMATION

ACUTE TOXICITY

Route of Exposure	Conclusion / Remarks
Inhalation	
Toxicity (Rat): LC50 > 5000 mg/ m3	Minimally Toxic. Based on assessment of the components.
Irritation: No end point data.	Negligible hazard at ambient/normal handling temperatures. Based on assessment of the components.
Ingestion	
Toxicity (Rat): LD50 > 2000 mg/kg	Minimally Toxic. Based on test data for structurally similar materials.
Skin	
Toxicity (Rabbit): LD50 > 2000 mg/kg	Minimally Toxic. Based on test data for structurally similar materials.
Irritation (Rabbit): Data available.	Negligible irritation to skin at ambient temperatures. Based on assessment of the components.
Eye	
Irritation (Rabbit): Data available.	May cause mild, short-lasting discomfort to eyes. Based on assessment of the components.

CHRONIC/OTHER EFFECTS

Contains:

Base oil severely refined: Not carcinogenic in animal studies. Representative material passes IP-346, Modified Ames test, and/or other screening tests. Dermal and inhalation studies showed minimal effects; lung non-specific infiltration of immune cells, oil deposition and minimal granuloma formation. Not sensitizing in test animals.

Additional information is available by request.

The following ingredients are cited on the lists below: None.

--REGULATORY LISTS SEARCHED--

1 = NTP CARC
2 = NTP SUS
3 = IARC 1
4 = IARC 2A
5 = IARC 2B
6 = OSHA CARC

SECTION 12	ECOLOGICAL INFORMATION

The information given is based on data available for the material, the components of the material, and similar materials.

ECOTOXICITY

Material -- Not expected to be harmful to aquatic organisms.

MOBILITY

Base oil component -- Low solubility and floats and is expected to migrate from water to the land. Expected to partition to sediment and wastewater solids.

PERSISTENCE AND DEGRADABILITY

Biodegradation:

Base oil component -- Expected to be inherently biodegradable

BIOACCUMULATION POTENTIAL

Base oil component -- Has the potential to bioaccumulate, however metabolism or physical properties may reduce the bioconcentration or limit bioavailability.

SECTION 13	DISPOSAL CONSIDERATIONS

Disposal recommendations based on material as supplied. Disposal must be in accordance with current applicable laws and regulations, and material characteristics at time of disposal.

DISPOSAL RECOMMENDATIONS

Product is suitable for burning in an enclosed controlled burner for fuel value or disposal by supervised incineration at very high temperatures to prevent formation of undesirable combustion products.

REGULATORY DISPOSAL INFORMATION

RCRA Information: The unused product, in our opinion, is not specifically listed by the EPA as a hazardous waste (40 CFR, Part 261D), nor is it formulated to contain materials which are listed as hazardous wastes. It does not exhibit the hazardous characteristics of ignitability, corrositivity or reactivity and is not formulated with contaminants as determined by the Toxicity Characteristic Leaching Procedure (TCLP). However, used product may be regulated.

Empty Container Warning PRECAUTIONARY LABEL TEXT: Empty containers may retain residue and can be dangerous. DO NOT PRESSURIZE, CUT, WELD, BRAZE, SOLDER, DRILL, GRIND OR EXPOSE SUCH CONTAINERS TO HEAT, FLAME, SPARKS, STATIC ELECTRICITY, OR OTHER SOURCES OF IGNITION; THEY MAY EXPLODE AND CAUSE INJURY OR DEATH. Do not attempt to refill or clean container since residue is difficult to remove. Empty drums should be completely drained, properly bunged and promptly returned to a drum reconditioner. All containers should be disposed of in an environmentally safe manner and in accordance with governmental regulations.

SECTION 14	TRANSPORT INFORMATION

LAND (DOT) : Not Regulated for Land Transport

LAND (TDG) : Not Regulated for Land Transport

SEA (IMDG) : Not Regulated for Sea Transport according to IMDG-Code

AIR (IATA) : Not Regulated for Air Transport

SECTION 15	REGULATORY INFORMATION

OSHA HAZARD COMMUNICATION STANDARD: When used for its intended purposes, this material is not classified as hazardous in accordance with OSHA 29 CFR 1910.1200.

NATIONAL CHEMICAL INVENTORY LISTING: DSL, TSCA

EPCRA: This material contains no extremely hazardous substances.

SARA (311/312) REPORTABLE HAZARD CATEGORIES: Delayed Health.

SARA (313) TOXIC RELEASE INVENTORY: This material contains no chemicals subject to the supplier notification requirements of the SARA 313 Toxic Release Program.

The Following Ingredients are Cited on the Lists Below:*

Chemical Name	CAS Number	List Citations
HYDROTREATED LIGHT NAPHTHENIC DISTILLATE (PETROLEUM)	64742-53-6	13, 17, 18
PHOSPHORODITHOIC ACID, O,O-DI C1-14-ALKYL ESTERS, ZINC SALTS (2:1) (ZDDP)	68649-42-3	15

--REGULATORY LISTS SEARCHED--

1 = ACGIH ALL	6 = TSCA 5a2	11 = CA P65 REPRO	16 = MN RTK
2 = ACGIH A1	7 = TSCA 5e	12 = CA RTK	17 = NJ RTK
3 = ACGIH A2	8 = TSCA 6	13 = IL RTK	18 = PA RTK
4 = OSHA Z	9 = TSCA 12b	14 = LA RTK	19 = RI RTK
5 = TSCA 4	10 = CA P65 CARC	15 = MI 293	

Code key: CARC=Carcinogen; REPRO=Reproductive
* EPA recently added new chemical substances to its TSCA Section 4 test rules. Please contact the supplier to confirm whether the ingredients in this product currently appear on a TSCA 4 or TSCA 12b list.

SECTION 16	OTHER INFORMATION

N/D = Not determined, N/A = Not applicable

THIS SAFETY DATA SHEET CONTAINS THE FOLLOWING REVISIONS:
No revision information is available.

The information and recommendations contained herein are, to the best of ExxonMobil's knowledge and belief, accurate and reliable as of the date issued. You can contact ExxonMobil to insure that this document is the most current available from ExxonMobil. The information and recommendations are offered for the user's consideration and examination. It is the user's responsibility to satisfy itself that the product is suitable for the intended use. If buyer repackages this product, it is the user's responsibility to insure proper health, safety and other necessary information is included with and/or on the container. Appropriate warnings and safe-handling procedures should be provided to handlers and users. Alteration of this document is strictly prohibited. Except to the extent required by law, re-publication or retransmission of this document, in whole or in part, is not permitted. The term, "ExxonMobil" is used for convenience, and may include any one or more of ExxonMobil Chemical Company, Exxon Mobil Corporation, or any affiliates in which they directly or indirectly hold any interest.

Internal Use Only
MHC: 0, 0, 0, 0, 0, 0 PPEC: A

DGN: 5007202 (1012936)

Copyright 2002 Exxon Mobil Corporation, All rights reserved

TIRE INFORMATION

1. Tire Safety Information

This portion of the user's manual contain tire safety information as required by 49 CFR 575.6.

Section 2.0 contains "Steps for determining correct load limit-trailer"

Section 2.2 contains " Steps for determining correct load limit-tow vehicle"

Section 2.3 contains a Glossary of Tire Terminology, including "cold" inflation pressure,"
" maximum inflation pressure" , recommended inflation pressure", and other non-technical terms.

Section 2.4 contains information from NHTSA brochure entitled " Tire Safety-Everything Rides On It".
This brochure as well as the preceding subsections, describes the following items:

- Tire labeling, including a description and explanation of each marking on the tires, and information about the DOT Tire Identification Number (TIN)
- Recommended tire inflation pressure, including description and explanation of :
  - A. Cold Inflation Pressure
  - B. Vehicle Placard and location of vehicle
  - C. Adverse safety consequences of under inflation (including tire failure)
  - D. Measuring and adjusting air pressure for proper inflation
- Tire Care, including maintenance and safety practices
- Vehicle load limits, including a description and explanation of the following items:
  - A. Locating and understanding the load limit information, total load capacity, and cargo capacity
  - B. Calculating total and cargo capacities with varying seating configurations including Quantitative Examples showing/ illustrating how the vehicles cargo and luggage capacity decreases as combined number and size of occupant increases. This item is also discussed in section 3
  - C. Determining compatibility of tire and vehicle load capabilities
  - D. Adverse Safety consequences of overloading on handling and stopping tires

1.1 Steps for Determining Correct Load Limit-Trailer

Determining the load limits of a trailer includes more than understanding the load limits of the tires alone. On all trailers there is a Federal Certification/ VIN label that is located on the forward half of the left (road) side of the unit. This certification/ VIN label will indicate the trailer's Gross Vehicle Weight Rating (GBWR). This is the most particular axle can weigh. If there are multiple axles, the GAWR of each axle will be provided.

If your trailer has a GVWR of 10,000 pounds or less, there is a vehicle placard located in the same location as the Certification label described above. This placard provides tire and loading information. In addition, this placard will show a statement regarding maximum cargo capacity. Cargo can be added to the trailer, up to the maximum weigh specified on the placard. The combined weigh of the cargo is provided as a single number. In any case, remember: the total weight of a fully loaded trailer can not exceed the stated GVWR.

For trailers with living quarters installed, the weight of water and propane also need to be considered. The weight of fully filled propane containers is considered part of the weight of the trailer before it is loaded with cargo, and is not considered part of the disposable cargo load. Water however, is a disposable cargo weight about 800 pounds. If more cargo is being transported, water can be off-loaded to keep the total amount of cargo added to the vehicle with the limits of the GVWR so as not to overload the vehicle. Understanding this flexibility will allow you, the owner, to make choices that fit your travel needs.

When loading your cargo, be sure it is distributed evenly to prevent overloading front to back and side to side. Heavy items should be placed low and as close to the axle positions as reasonable. Too many items on one side may overload a tire. The best way to know the actual weigh of the vehicle is to weigh it at a public scale. Talk to our dealer to discuss the weighing methods needed toe capture the various weights related to the trailer. This would include the weight empty or unloaded, weights per axle, wheel, hitch or king-pin, and total weight.

Excessive loads and/or under inflation cause tire overloading and, as a result abnormal tire flexing occurs. This situation can generate an excessive amount of heat within the tire. Excessive heat may lead to tire failure. It is the air pressure that enables as tire to support the load., so proper inflation is critical. The proper air pressure may be found on the

1.1.1 Trailers 10,000 Pounds GVWR or Less

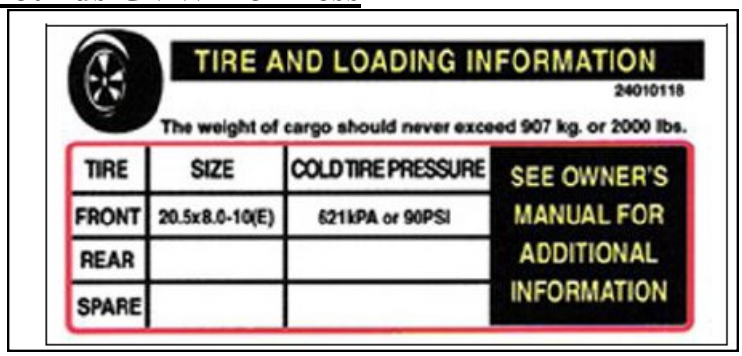

Tire and Loading Information Placard-Figure 1

1. Locate the statement, "The weight of cargo should never exceed XXX kg or XXX lbs." on your vehicle's placard. See figure1-1
2. This figure equals the available amount of cargo and luggage load capacity
3. Determine the combined weigh of luggage and cargo being loaded on the vehicle. The weight may not safely exceed the available cargo and luggage load capacity.

The trailer's placard refers to the tire information placard attached adjacent to or near the trailer's VIN (certification) label at the left front of the trailer.

1.1.2. Trailers Over 10,000 LBS. GVWR (Note: These are not required to have a tire information placard on the vehicle

1. Determine the empty weight of your trailer by weighting the trailer using a public scale or other means.
   - This step does not have to repeated
2. Locate the GVWR (Gross Vehicle Weight Rating) of the trailer on your trailer's VIN (certification) label.
3. Subtract the empty weight of your trailer form the GVWR stated on the VIN label. That weight is the maximum available cargo capacity of the trailer and may not be safely exceeded.

1.2. Steps for Determining Correct Load Limit-Tow Vehicle

1. Locate the statement, " The combined wright of occupant and cargo should never exceed XXX LBS., ' on your vehicle's placard
2. Determine the combined weight of the driver and passengers from who will be riding in your vehicle.
3. Subtract the combined weight of the driver and passengers from XXX Kilograms or XXX LBS.
4. The resulting figure equals the available amount of cargo and luggage capacity. For example. If the "XXX" amount equals 1400 LBS. and there are five 150 LB. passengers in your vehicle, the amount of available cargo and luggage
capacity is 650 LBS. (1400-750 (5X150) = 650 LBS.)
5.Determine the combined weight of luggage and cargo being loaded on the vehicle. That weight may not safely exceed the available cargo and luggage capacity calculated in step #4
6. If your vehicle will be towing a trailer, load from your trailer will be transferred to your vehicle. Consult the tow vehicle' s manual to determine how this weight transfer reduces the available cargo and luggage capacity of your Vehicle.

1.3 Glossary Of Tire Terminology

Accessory Weight
The combined weight (in excess of those standard items which may be replaced) of automatic transmission, power steering ,power brakes, power windows, power seats radio and heater, to extent that these items are available as factory-installed equipment (whether installed or not)

Bead
The part of the tire is made of steel wires, wrapped or reinforced by ply cords and that is shaped to fit the rim

Blas ply tire
A pneumatic tire in which ply cords that extend to the beads are laid at alternate angles substantially less than 90 degrees to the centerline of the tread

Carcass
The tire structure, expect tread and sidewalk rubber which, when inflated, bears the load

Chunking
The breaking away of pieces of the tread or sidewall

Cold Inflation Pressure
The pressure in the tire before you drive

Cord
The strands forming the piles in the tire

Cord Separation
The parting of cords from adjacent rubber compounds

Cracking
Any parting within the tread, sidewall, or inner liner of the tire extending to cord material

CT
A pneumatic tire with an inverted flange tire and rim system in which the rim is designed with rim flanges pointed radially inward and the tire is designed to fit on the underside of the rim in a manner that encloses the rim flanges inside the air cavity of the tire

Curb Weight
The weight of a motor vehicle with standard equipment including the maximum capacity of fuel, oil, and coolant, and, if so equipped, air conditioning and additional weight optional engine

Extra Load Tire
A tire designed to operate a higher loads and at higher inflation pressures than the corresponding standard tire

Groove
The space between two adjacent tread ribs

Gross Axle Weight Rating
The maximum weight that any axle can support, as published on the certification/VIN label on front left side of the trailer. Actual weight determined by weighing each axle on public scale, with the trailer attached to the towing vehicle

Hitch Weight
The downward force exerted on the hitch ball by the trailer coupler

Interliner
The layer (s) forming the inside surface of a tubeless tire that contains the inflating medium within the tire

Innerliner Separation
The parting of the innerliner from cord material in the carcass

Intended Outboard Sidewall
The sidewall that contains a white-wall, bears white lettering or bears manufacturer, brand, and/or model name molding that is higher or deeper than the same molding on the other sidewall of the tire or the outward facing sidewall of an asymmetrical tire that has a particular side that must always face outward when mounted on a vehicle.

Light Truck (LT) Tire
A tire designated by its manufacturer as primarily intended for use on lightweight trucks or multipurpose passenger vehicles.

Load Rating
The maximum load that a tire is rated to carry for a given inflation pressure

Maximum Load Rating
The load rating for a tire at the maximum permissible inflation pressure for that tire

Maximum Loaded Vehicle Weight
The sum curb weight, accessory weight, vehicle capacity weight, and production options weight

Measuring Rim
The rim on which a tire is fitted for physical dimension requirements

Pin Weight
The downward force applied to the 5th wheel or gooseneck ball, by the trailer kingpin or gooseneck coupler

Non-Pneumatic Rim
A mechanical device which, when a non-pneumatic tire assembly incorporates a wheel, supports the tire, and attaches, either integrally or separably, to the wheel center member and upon which the tire is attached

Non-Pneumatic Spare Tire Assembly
A non-pneumatic tire assembly intended for temporary use in place of one of the pneumatic tires and rims that are fitted to a passenger car in compliance with requirement of this standard

Non-Pneumatic Tire
A mechanical device which transmits, either directly or through a wheel or wheel center member, the vertical load and tractive forces from roadway to the vehicle, generates the tractive forces that provide that directional control of the vehicle and does not rely on the containment of any gas or fluid or providing those functions

Non-Pneumatic Tire Assembly
A non-pneumatic tire, alone or in combination with a wheel or wheel center member, which can be mounted on a vehicle

Normal Occupant Weight
This means 68 kilograms (150 lbs.) time the number of occupants specified in the second column of Table 1 of 49 CFR 571.110.

Occupant Distribution
The distribution of occupants in a vehicle as specified in the third column of Table 1 of 49 CFR 571.110.

Open Splice
Any parting of any junction of tread, sidewall, or innerliner that extends to cord material

Outer Diameter
The overall diameter of an inflated new tire

Overall Width
The linear distance between the exteriors of the sidewalls of an inflated tire, including elevations due to labeling, decorations, or protective bands or ribs

Ply
A layer of rubber-coated parallel cords

Ply Separation
A parting of rubber compound between adjacent plies

Pneumatic Tire
A mechanical device made of rubber, chemicals, fabric and steel or other materials, that when mounted on an automotive wheel, provides the traction and contains the gas or fluid that sustains the load.

Production Options Weight
The combined weight of those installed regular production options weighing over 2.3 Kilograms (5lbs.) in excess of those standard items which they replace, not previously considered in curb weight or accessory weight, including heavy duty brakes, ride levelers, roof rack, heavy duty battery, and special trim.

Radial Ply Tire
A pneumatic tire in which the ply cords that extend to the beads are laid at substantially 90 degrees to the centerline of the tread

Recommended Inflation Pressure
This is the inflation pressure provided by the vehicle manufacture on the Tire Information Label and on the Certification/VIN tag.

Reinforced Tire
A tire designed to operate at higher loads and at higher inflation pressures than the corresponding standard tire.

Rim
A metal support for a tire or a tire and tube assembly upon which the tire beads are seated

Rim Diameter
This means the rim diameter and width

Rim Type Designation
This means the industry of manufacturer's designation for a rim by style or code

Rim Width
This means the normal distance between rim flanges

Section Width
The linear distance between the exteriors of the sidewalls of an inflated tire, excluding elevations due to labeling, decoration, or protective bands.

Sidewall
That portion of a tire between the tread and bead

Sidewall Separation
The parting of the rubber compound form the cord material in the sidewall

Special Trailer (ST) Tire
The "ST" is an indication the tire is for trailer use only

Test Rim
The rim on which a tire is fitted for testing and may be an rim listed as appropriate for use with that tire

Tread
That portion of a tire that comes into contact with the road

Tread Rib
A tread section running circumferentially around a tire

Treadwear Indicators (TWI)
The projections within the principal grooves designed to give a visual indication of the degrees of wear of the tread

Vehicle Capacity Weight
The rated cargo and luggage load plus 68 kilograms (150 lbs.) times the vehicle's designated seating capacity

Vehicle Maximum load On The Tire
The load on an individual tire that is determined by distributing to each axle its share of the curb weight, accessory weight, and normal occupant weight (distributed in accordance with Table 1 of CRF 49 571.110) and dividing by 2

Weather Side
The surface area of the rim not covered by the inflated tire

Wheel Center Member
In the case of a non-pneumatic tire assembly incorporating a wheel, a mechanical device which attaches, Either integrally or separably, to the non-pneumatic tire assembly not incorporating a wheel, a mechanical device which attaches, either integrally or separably, to the non-pneumatic tire and provides the connection between tire and the vehicle

Wheel Holding Fixture
The fixture used to hold the wheel and tire assembly securely during testing

1.4. Tire Safety-Everything Rides On It

The national Traffic Safety Administration (NHTSA) has published a brochure (DOT HS 809 361) that discusses all aspects of Tire Safety, as required by CFR 575.6 This brochure is reproduced in part below. It can be obtained and downloaded from NHTSA, free of charge, from the following website:

http:www.nhtsa.dot.gov/cars/rules/TireSafety/ridesonit/tireindex/ html

Studies of tire safety show that maintain proper tire pressure, observing tire and vehicle load limits (not carrying more weight in your vehicle than your tires or vehicle can safely handle), avoiding road hazards, and inspecting tires for cuts, slashes, and other irregularities are most important things you can do to avoid tire failure, such as tread separation or blowout and flat tires. These actions, along with other care and maintenance activities, can also:

- Improve vehicle handling
- Help protect you and others from avoidable breakdowns and accidents
- Improve fuel economy
- Increase the life of your tires

This booklet presents a comprehensive overview of tire safety, including information on the following topics:

- Basic tire maintenance
- Uniform Tire Quality Grading System
- Fundamental characteristics of tires
- Tire safety tips

Use this information to make tire safety a regular part of your vehicle maintenance routine. Recognize that the time you spend is minimal compared with inconvenience and safety consequences of a flat tire or other tire failure.

1.5. Safety First-Basic Tire Maintenance

Properly maintained tires improve the steering, stopping , traction and load-carrying capability of your vehicle underinflated tires and over loaded vehicles are a major cause of tire failure. Therefore as mentioned above, to avoid flat tires and other types of tire failure, you should maintain proper tire pressure, observe tire and vehicle load limits, avoid road hazards, and regularly inspect your tires.

1.5.1 Finding you vehicle's recommended tire pressure and load limits

Tire information placards and vehicle certification labels contain information on tires and load limits. These limits indicate the vehicle manufacturer's information including:

- Recommended tire size
- Recommended tire inflation pressure
- Vehicle capacity weight (VCW-the maximum occupant and cargo weight a vehicle is designed to carry)
- Front and rear gross axle weight ratings (GAWR-the maximum weight the axle systems are designed to carry)

Both placards and certification labels are permanently attached to the trailer near the left front

1.5.2. Understanding Tire Pressure and Load Limits

Tire inflation pressure is the level of air in the tire that provides it with load-carrying capacity and affects the overall performance of the vehicle. The tire inflation pressure is a number that indicates the amount of air Pressure-measured in pounds per square inch (psi) -a tire requires to be properly inflated. (you will also find this number on the vehicle information placard expressed in kilopascals (kpa), which is the metric measure used internationally)

Manufacturers of passenger vehicles and light truck determined this number based on the vehicle's design load limit, that is , the greatest amount of weight a vehicle can safely carry and the vehicles tire size. The proper tire pressure for your vehicle is referred to as the " recommended cold inflation pressure" (As you will read below, it is difficult to obtain the recommended tire pressure if your tires are not cold) because tires are designed to be used on more than one type of vehicle, tire manufactures list the "maximum" permissible inflation pressure" on the tire sidewall. This number is the greatest amount of air pressure that should ever be put in the tire under normal driving conditions.

1.5.3. Checking Tire Pressure

It is important to check your vehicle's tire pressure at least once a month for the following reasons:

- Most tire may naturally lose air over time
- Tire can lose air suddenly if you drive over pothole or other object or if you strike the curb when parking.
- With radial tires, it is usually not possible to determine underinflation by visual inspection

For convenience, purchases a tire pressure gauge to keep in your vehicle. Gauges can be purchased at tire dealerships, auto supply stores, and other retail outlets.

The recommended tire inflation pressure that vehicle manufacturers provide reflects the proper psi when a tire is cold. The term cold does not relate to the outside temperature. Rather, a cold tire is one that has not been driven on for at least three hours. When you drive, your tires get warmer, causing the air pressure within them to increase. Therefore, to get and accurate tire pressure reading, you must measure tire pressure when the tires are cold or compensate for extra pressure in warm tires.

1.5.4. Steps For Maintaining Proper Tire Pressure

- **Step 1:** Locate the recommended tire pressure on the vehicle's tire information placard, certification label, or the owner's manual.
- **Step 2:** Record the tire pressure of all tires
- **Step 3:** If the tire pressure is to high in any of the tires, slowly release air by gently pressuring on the tire valve stem with the edge of your tire gauge until you get to the correct pressure
- **Step: 4:** If the tire pressure is too low, note the difference between the measured and the correct tire pressure. These "missing" pounds of pressure are what you will need to add
- **Step 5:** At a service station, add the missing pounds of air pressure (except in cases in which the front and rear tires are supposed to have different amounts of pressure)

If you have been driving your vehicle and think that a tire is underinflated, fill it to the recommended cold inflation pressure indicated on your vehicle's tire information placard or certification label. While your tire may still be slightly underinflated due to the extra pounds of pressure in the warm tire, it is safer to drive air pressure that is slightly lower than the vehicle manufacturer's recommended cold inflation pressure than to drive with a significantly underinflated tire. Since this is a temporary fix, don't forget to recheck and adjust the tire's pressure when you can obtain a cold reading.

1.5.5. Tire Size

To maintain tire safety, purchase new tires that are the same size as the vehicle's original tires or another size recommended by the manufacturer. Look at the tire information placard, the owner's manual, or the sidewall of the tire you are replacing to find this information. If you have any doubt about the correct size to choose, consult with the tire dealer.

1.5.6. Tire Tread

The tire tread provides the gripping action and action traction that prevent your vehicle from slipping or sliding, especially when the road is wet or icy. In general, tires are not safe and should be replaced when the tread is worn down to 1/16 of an inch. Tire have built-in tread wear indicators that let you know when it is time to replace your tires. These indicators are raised sections spaced intermittently in the bottom of the tread grooves. When they appear "even" with the outside of the tread with Lincoln's head upside down and facing you. If you can see the top of Lincoln's head, you are ready for new tires.

1.5.7. Tire Balance and Wheel Alignment

To avoid vibration or shaking of the vehicle when a tire rotates, the tire must be properly balanced. This balance is achieved by positioning weights on the wheel to counterbalance heavy spots on the wheel-and-tire assembly. A wheel alignment adjusts the angles of the wheels so that they are positioned correctly relative to the vehicle's frame. This adjustment maximizes the life of your tires. These adjustments require special equipment and should be performed by a qualified technician.

1.5.8. Tire Repair

The proper repaid of a punctured tire requires a plug for the hole and a patch for the area inside the tire that surrounds the puncture hole. Punctures through the tread can be repaired if they are not too large, but punctures to the sidewall should be repaired. Tires must be removed from the rim to be properly inspected before being plugged and patched.

1.5.9. Tire Fundamentals

Federal Law requires tire manufactures to place standardized information on the sidewall of all tires. This information identifies and describes the fundamental characteristics of the tire and also provides a tire identification number for safety standard certification and in case of a recall.

1.5.9.1. Information on Passenger Vehicle Tires

Please Refer to the Diagram Below

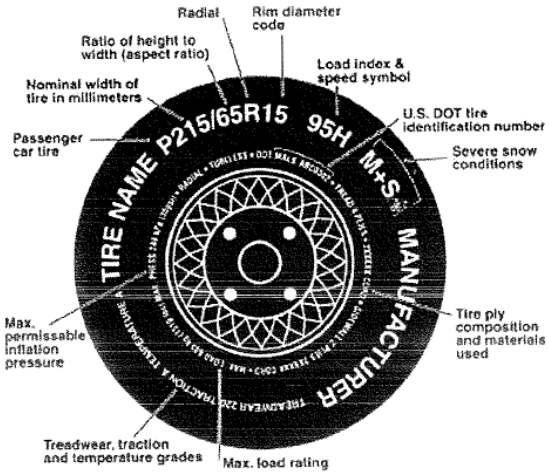

P
The "P" indicates the tire is for passenger vehicles

Next Number
This three-digit number gives the width in millimeters of the tire from sidewall edge to sidewall edge. In general, the larger the number, the wider the tire.

Next Number
This two digit number, known as the aspect ratio, gives the tire's ration of height to width. Numbers of 70 or lower indicate a short sidewall for improved steering response and better overall handling on dry pavement.

R
The "R" stands for radial. Radial ply construction of tires has been the industry standard for the past 20 years

Next Number
This two-digit number is the wheel or rim diameter in inches. If you change your wheel size, you will have to purchase new tires to match the new wheel diameter.

Next Number
This two-or three digit number is the tire's load index. It is a measurement of how much weight each tire can support. You may find this information in your owner's manual.

M + S
The " M + S" or "M/S" indicates that the tire has some mud and snow capability. Most radial tires have these markings; hence they have some mud and snow capability.

Speed Rating
The speed rating denotes the speed at which a tire is designed to be driven for extended periods of time. The ratings range from 99 miles per hour (mph) to 186 mph. These ratings are listed below. Note: You many not find this information on all tires because it not required by law.

Tire Safety Information

Letter Rating	Speed Rating
Q	99 Mph
R	106 Mph
S	112 Mph
T	118 Mph
U	124 Mph
H	130 Mph
V	149 Mph
W	168* Mph
Y	186* Mph

* For tires with a maximum speed capability over 149 mph, tire manufacturers sometimes use the letters ZR. For those with a maximum speed capability over 186 mph, tire manufacturers always use the letters ZR

U.S. DOT Tire Identification Number
This begins with the letters " DOT" and indicates that the tire meets all federal standards. The next two numbers or letters re the plant code where it was manufactured, and the last four numbers represent the week and year the tire was built. For example, the numbers 3197 means the 31st week of 1997. The other numbers are marketing codes used at the manufacture's discretion. This information is used to contact consumers if a tire defect requires a recall.

Tire Ply Composition and Materials Used
The number of plies indicates the number of layers of rubber-coated fabric in tire. In general, the greater the number plies, the more weight a tire can support. Tire manufactures also must indicate the materials in the tire, which include steel, nylon, polyester, and others

Maximum Load Rating
This number indicated the maximum load in kilograms and pounds that can be carried by the tire

Maximum Permissible Inflation Pressure
This number is the greatest amount of air pressure that should ever be put in the tire under normal driving conditions

1.5.9.2. UTQGS Information

Treadwear Number
This letter indicated the tire's wear rate. The higher the treadwear number is, the longer it should take for tread wear down. For example, a tire graded 400 should last twice as long as a tire graded 200.

Traction Letter
This letter indicates a tire's ability to stop on wet pavement. A higher graded tire should allow you to stop your car on wet roads in a shorter distance than a tire with lower grade. Traction is graded form highest to lowest as "AA", "A","B", and "C".

Temperature Letter
This letter indicates a tire's resistance to heat. The temperature grade is for a tire that is inflated properly and not overloaded. Excessive speed, udnerinflation or excessive loading, either separately or in commination, can cause heat build-up and possible tire failure. From highest to lowest, a tire's resistance to heat is graded as "A", "B", or "C"

1.5.9.3. Additional Information on Light Truck Tires

Please refer to the following diagram

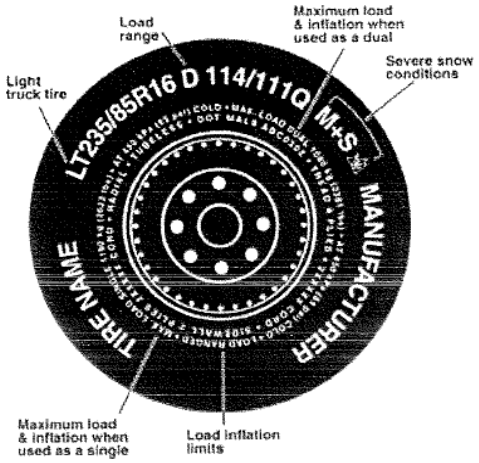

Tire for light trucks have other markings besides those found on the sidewalls of passenger tires.

LT
The "LT" indicates the tire is for light truck or trailers.

ST
An "ST" is an indication the tire is for trailer use only

Max. Load Dual KG (lbs.) at kPa (psi) Cold
This information indicates the maximum load and tire pressure when the tire is used as a dual, that is, when four tires are put on each rear axle (a total of six or more tires on the vehicle)

Max. Load Single KG (lbs.) at kPa (psi) Cold
This information indicates the maximum load and tire pressure when the tire is used as a single

Load Range
This information identifies the tire's load-carrying capabilities and it inflation limits

1.6. Tire Safety Tips

Preventing Tire Damage

- Slow down if you have to go over a pothole or other objects in the road
- Do not run over curbs or other foreign objects in the roadway, and try not to strike the curb when parking.

Tire Safety Checklist

- Check tire pressure regularly (at least once a month), including the spare
- Inspect tires for uneven wear patterns on the tread, cracks, foreign objects, or other signs of wear or trauma
- Remove bits of glass and foreign objects wedges in the tread
- Make sure your tire valves have valve caps
- Check tire pressure before going on a long trip
- Do no overload your vehicle. Check the tire information and loading placard or user's manual of the maximum recommended load for the vehicle